DUPLICATE

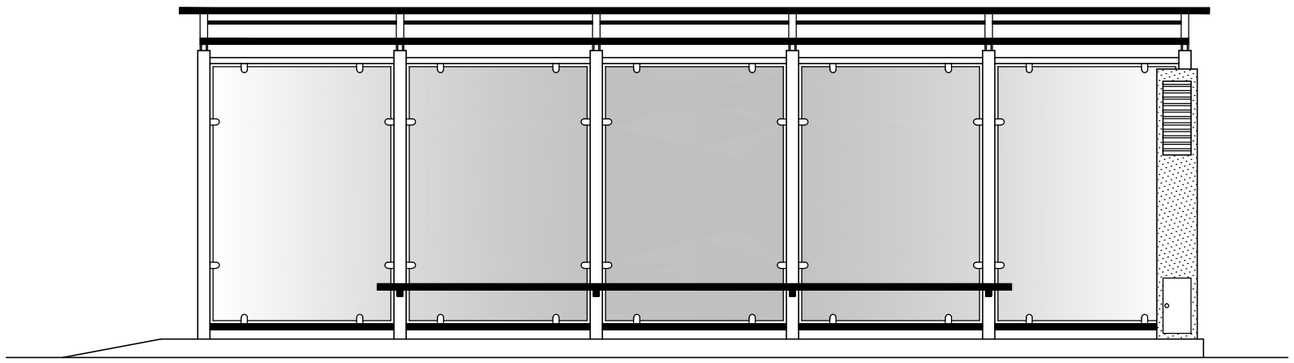

FRONT ELEVATION

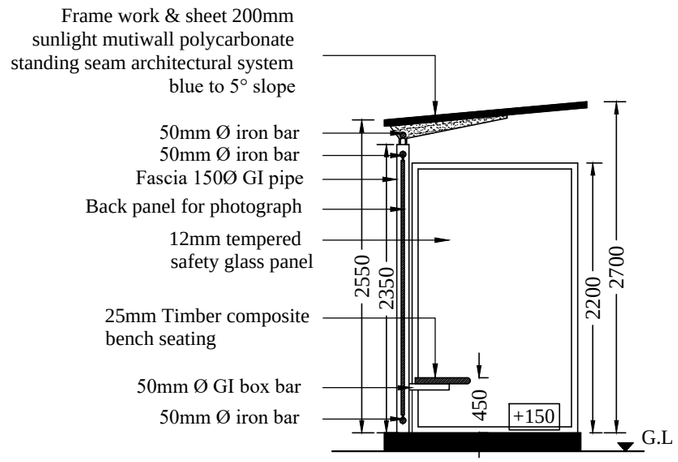

SECTION Y-Y

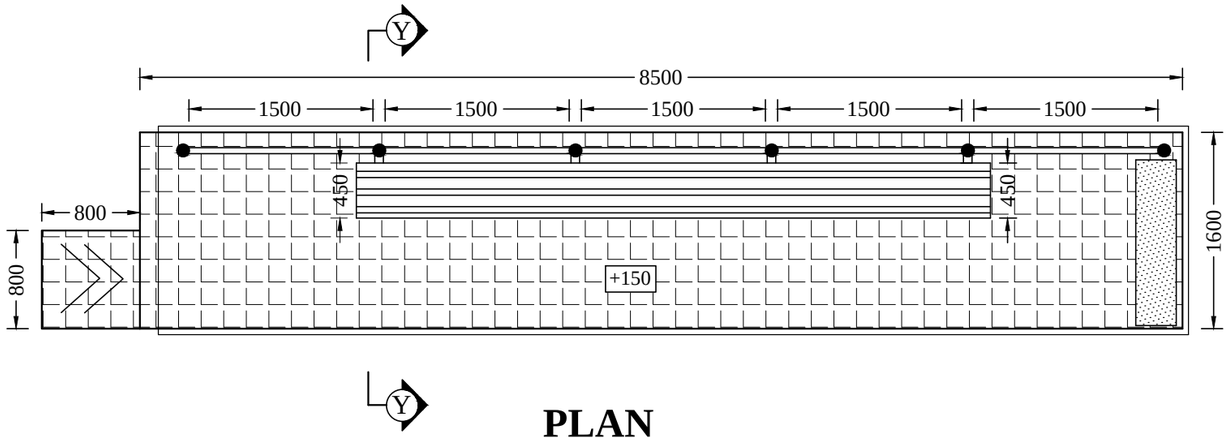

PLAN

Scale :- 1:50

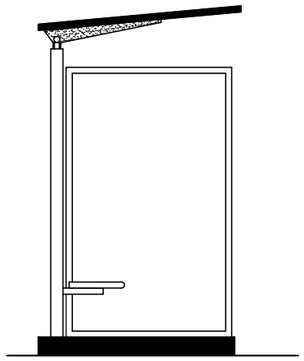

SIDE ELEVATION

MUNICIPAL ENGINEER'S DEPARTMENT COLOMBO MUNICIPAL COUNCIL, TOWNHALL, COLOMBO 07	TYPICAL DETAIL OF EXISTING BUS SHELTER	DRAWN BY- W.A.L.N.C.WELIVITA DATE - 07.04.2022	DESIGNED BY: ENGINEER DESIGN	CHECKED BY: D.D (TRAFFIC & HIGHWAY DESIGN)	REVISION	ISSUED FOR	DATE	BY	AUTHORITY
		RECOMMANDED BY:							
		DIRECTOR ENG. (TDRS)	D. M. C. (ENG. SERVICE)		DWG. No.	TH/2021/		SCALE - 1:500	