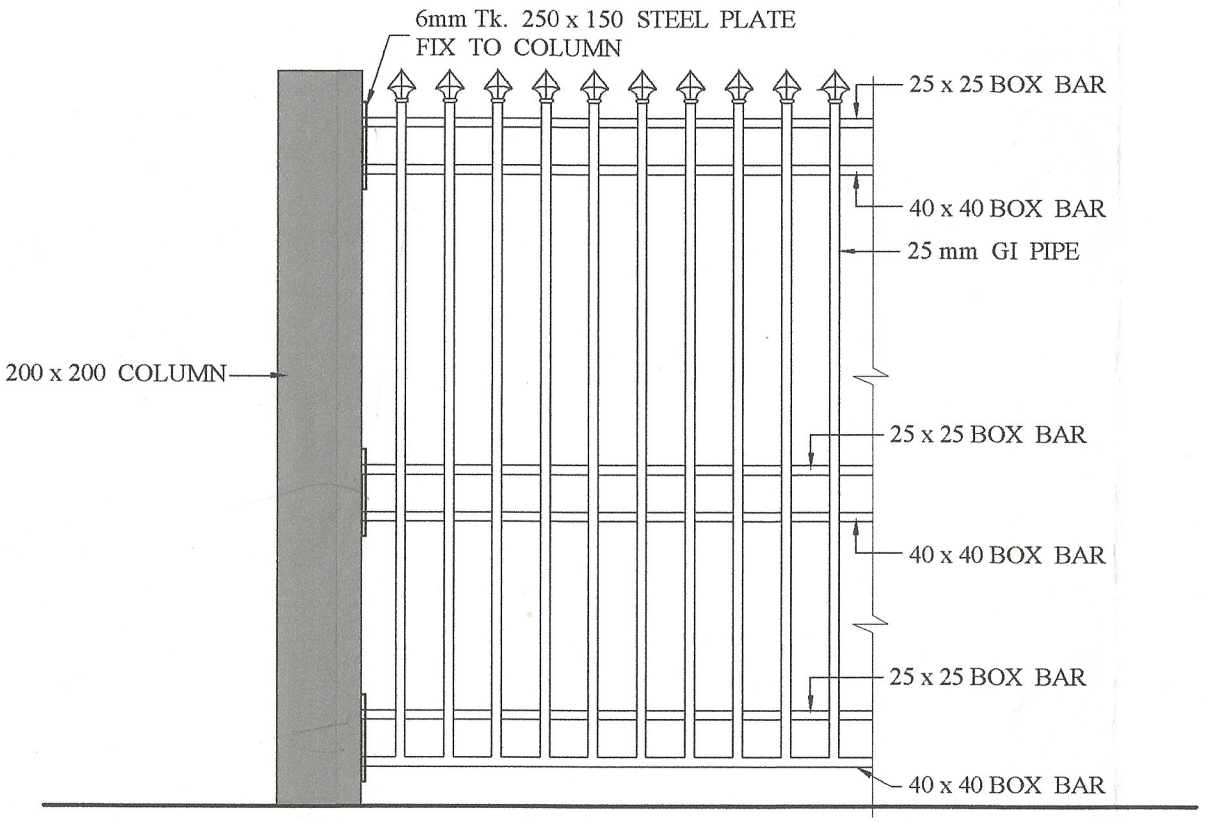

DETAIL OF FENCE

SCALE 1 : 20

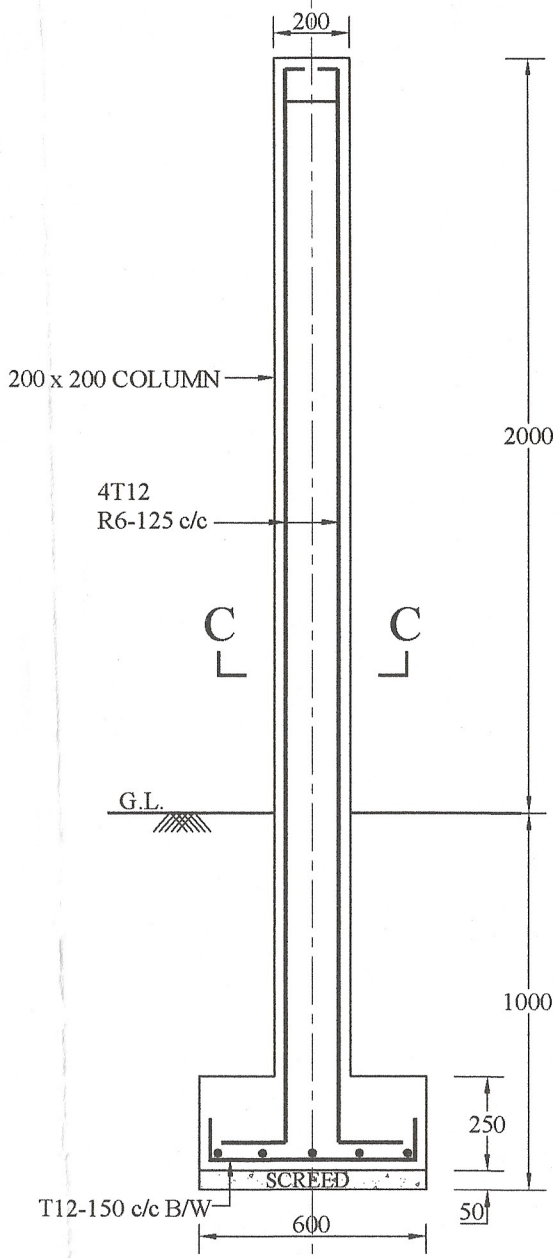

SECTION A - A

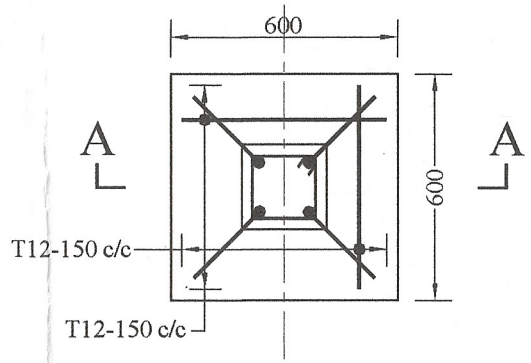

DETAIL OF COLUMN

SCALE 1 : 20

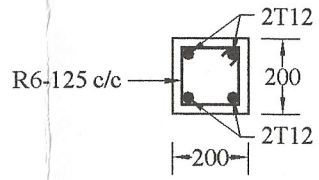

SECTION C- C

SCALE 1 : 20

DUPLICATE

JOB TITLE:

PROPOSED RENOVATIONS TO DUPLICATION ROAD COMMUNITY CENTRE COLOMBO - 03.

DRAWING TITLE:

R/F DETAIL OF TYPICAL FENCE AND GATE

COLOMBO MUNICIPAL COUNCIL
MUNICIPAL ENGINEER'S DEPARTMENT

DRG. NO.	STR / 2021 / 22 / 01	SHEET NO. 01 OF 02
JOB NO.	2021 / 22	

DRAWN BY: GAYANI MUNASINGHA	DESIGNED BY: W. H. U. I. KUMARA ENGINEER (DESIGNS)
CHECKED BY: D.O.A. (S)	CHECKED BY: W. A. S. SAROJINI D.D. ENG.(DESIGNS)
SCALES: AS SHOWN	RECOMMENDED BY: P. A. CHANDRAPALA DIRECTOR ENG. (T.D.R.S.)
DATE: 07 . 12. 2021	APPROVED BY: Y. SYLVESTER D.M.C. (ENG. SERVICES)