ORIGINAL

BIDDING DOCUMENTS WITH REFERENCE TO THE STANDARD BIDDING DOCUMENT (ICTAD/SBD/02 – SECOND EDITION OF JANUARY 2007)

Project: Proposed Pavilion at Cooray Play Ground Wellawatta,Colombo06

CONTENTS

ORIGINAL

INVITATION FOR BIDS

ORIGINAL

Invitation for Bids

Colombo Municipal Council

Proposed Pavilion at Cooray Play Ground Wellawatta,Colombo06

Contract Number: ME/SR/BN/295/2021

1. Municipal Commissioner of Colombo Municipal Council on behalf of Colombo Municipal Council now invites sealed bids from eligible and qualified bidders for **'Proposed Pavilion at Cooray Play Ground Wellawatta, Colombo06'** and estimated to cost **Rs. 216 Million approximate excluding contingencies and taxes.**
   The work consists of **Four story building construction work for pavilion, Indoor Sports Complex and Multipurpose Hall**
   The construction period is **420 days.**

2. Bidding will be conducted through National Competitive bidding procedure.

3. To be eligible for contract award, the successful bidder shall not have been blacklisted and shall meet following requirements.
   Building contractors of ICTAD grade C3 and C2.

4. Qualification requirements to qualify for contract award include:
   a. **Average annual volume of construction work performed in last five years shall be at least Rs. 278 Million. (Verifying documents such as copies of Letters of Acceptance, completion certificates, successful on-going construction certificates & details shall be submitted along with the bid.)**
   b. **Experience in works of pavilion, Indoor Sports Complex and Multipurpose Hall type construction work or similar nature (to the satisfaction of Technical Evaluation Committee) within last five years shall be one (1) year. (Verifying documents such as copies of Letters of Acceptance, completion certificates, successful on-going construction certificates & details shall be submitted along with the bid.)**
   c. **Bidder shall have an exclusive credit facility of at least Rs. 50 Million for this project. (proof document shall be submitted with the bid.)**
   d. **Bidder shall assign a qualified charted Civil Engineer who has 3 years minimum experience in similar construction work for the project.**
   e. **Bidder shall assign Charted Engineer and two qualified technical officer in the relevant field for the project.**
   f. **All other requirements mentioned in bidding data.**

5. Interested bidders may obtain further information from and inspect the documents at Projects Management Division of Colombo Municipal Council, Town Hall, Colombo 7 from 9.00 hours to 15.30 hours on any working day except on Saturdays, Sundays & Public Holidays or CMC website

6. A complete set of Bidding Documents in English language
   - **may be purchased** by interested bidders from Projects Management Division of Colombo Municipal Council, Town hall, Colombo 7 on the

ORIGINAL

submission of a written application to Municipal Commissioner, Colombo Municipal Council **till 10.00 hours on 23/11/2021** from 9.00 hours to 15.30 hours on any working day except Saturdays, Sundays and Public Holidays from 9.00 hours to 15.30 hours upon payment of a non- refundable fee of Rs. 5,400.00 (including VAT). The method of payment will be in cash or

- ii. **Download from the CMC website** (www.colombo.mc.gov.lk). Non-refundable bidding document fee of Rs.5,400/- for each bid can be paid by following method. It is mandatory to attach the receipt / slip with the bidding document.
    - Any People's Bank branch to credit People's Bank, Town Hall branch, Acc No: 167-1-001-6-3169425.
    - Payment counters of following Municipal premises of Colombo city limit from 9.00 a.m. to 3.00 p.m. on week days.

      District Office 04,:
      No: 147, High Level Road, Kirulapone,
      Colombo 06.

      Drainage & Water Supply Division,
      Maligakanda,
      Colombo 10.

7. Sealed bids in duplicate shall be addressed to Municipal Commissioner and **placed in the tender box** at Municipal Secretary's Department of Colombo Municipal Council, Town Hall, Colombo 7 **on or before 10.00 hours on 24.11.2021**. Bids sent by post will be rejected. Late bids will also be rejected. Bids will be opened soon after the closing in the presence of the bidders or bidders' representatives who choose to attend. If this day is declared as a public holiday, bids will be closed at 10.00 hours on the following working day and opened immediately thereafter.

8. Bids shall be valid till 23/05/2022.

9. All bids shall be accompanied by unconditional on demand bid security of **Rs. 4,320,000.00** in the form of a guarantee obtained from a reputed Bank or Insurance Company in Sri Lanka. Bid security shall be valid **till**22/06/202 **.**

10. A pre-bid meeting will be held **at 10am on 16.11.2021 at Conference room, TDRS Division ,Townhall.**

Municipal Commissioner,
Colombo Municipal Council,
Town Hall,
Colombo7.

ORIGINAL

SECTION 1

INSTRUCTIONS TO BIDDERS (ITB)

Instructions to Bidders Shall be Read in Conjunction with Bidding Data under section 2, which shall take precedence over the Instructions to Bidders.

Instruction to Bidders will not be a part of the Contract and will cease to have effect once the Contract is signed.

Instruction to Bidders applicable to this contract shall be Second Edition - January 2007 of Standard Bidding Document Procurement of Works – Major Contracts (ICTAD/SBD/02) in Sri Lanka, published by the Institution of Construction Training and Development (ICTAD), Sri Lanka (Presently Construction Industry Development Authority).

Section 1 of this publication is not issued with bidding documents and Bidders are expected to purchase and refer publication (ICTAD/ SBD/ 02) for Instructions to Bidders from Institute of Construction Training and Development (ICTAD), Sawsiripaya, 123, Wijerama Mawatha, Colombo 07.

ORIGINAL

SECTION 2

BIDDING DATA

ORIGINAL

Bidding Data

ITB Clause Ref.	Entry
1.1	**Employer's Name and Address** Name: Colombo Municipal Council. Address: Town Hall, Colombo 7.
1.1	**Scope of Works** Location of the Site:Cooray Park, Wellawatta, Colombo06 The works consists of construction of **pavilion, Indoor Sports Complex and Multipurpose Hall** work as per BOQ. Identification Number: **ME/SR/BN/295/2021** Time for Completion of the whole of the work shall be **420 days**
1.2	If sectional completion is accepted insert such information. **Not applicable**
2.1	**Source of Funds** The source of fund is **Colombo Municipal Council.**
4.1	**Qualification Information** The following information shall be provided in Section 9 - Schedules: • ICTAD registration Registration number ..... Grade ..... Speciality ..... Expiry date ..... • VAT Registration No. ..... • Attach Construction Programme • Attach Legal status (Sole Proprietor, Partnership, Company etc.) • Attach authentication for signatory • Total monetary value of construction work performed within last five years • Experience in works of similar nature and size within last five years

ORIGINAL

- Credit facility
- Construction equipment
- Profiles & Qualifications of key construction management staff
- Attach work plan and methods

4.2 (a) **ICTAD registration required**

Speciality: Building Construction

Grade :**C3 &C2**

4.2 (b)

Average annual volume of construction work performed in last 5 years

Shall be at least Rs. **278** Million.

4.2 (d) Proposals for the timely acquisition (own,lease,hire, etc.) of all essential equipment for building construction work shall be submitted.

4.2 (e) **Required qualifications and experience for the key site personnel**

Project Manager : Chartered Civil Engineer with at least 10 years experience.

Site Engineer: Civil Engineer with B.Sc Engineering and at least 5 years experience in the field of similar type building construction.

Technical Officers: NDT, NCT, HNDA or equivalent qualified.

4.2 (f) **Liquid assets and/or credit facilities required**

Bidder shall have an exclusive credit facility of at least Rs. 50 Million for this project.

10.1 **Clarification of Bidding Documents**

Employer's address for clarification of bidding documents is:

Name: Director Engineering (Projects)

Address: Colombo Municipal Council, Town Hall, Colombo 7.

Email: dirproj@colombo.mc.gov.lk

Telephone: 0112692403, Facsimile: 0112692403

ORIGINAL

13.1 (A)&(B)

Any other documents to be submit with the bid;

Verifying documents requested in invitation for bids pertained to above 4.2(b) & 4.2(f).

Adjustments for change in cost

14.4 The contract is not subjected to price adjustment

15.1 **Currency of BID:**

Shall be Sri Lankan Rupees

16.1 **Period of Bid Validity:**

Till 23.05.2022

17.1 **Amount of Bid Security:**

Sri Lankan Rupees **4,320,000.00**

17.2 **Validity of Bid Security:22.06.2022**

19.1 **Pre-Bid Meeting**

Date : **16.11.2021**

Time : **10.00 am**

Venue : **Conference room, Traffic & Design Division of CMC.**

21.2 (a) **Employer's address for BID Submission**

Municipal Commissioner

Colombo Municipal Council

Town Hall

Colombo 7.

21.2 (b) **Identification Number of Contract**

ME/SR/BN/295/2021

22.1 **Deadline for submission of Bids**

Date: **23.11.2021** Till: **10.00 am**

ORIGINAL

25.1 **Bid Opening**

Date : 24.**11.2021**

Time : **10.00 am**

Venue: Municipal Secretary's office, Secretary's Department, Colombo Municipal Council, Town Hall, Colombo 7.

32 **Address of Procurement appeal :**

Address: Municipal Commissioner, Colombo Municipal Council, Town Hall, Colombo 7.

Cash Deposit: **Rs. 25,000.00**

35.1 **Amount of Performance Security:**

The amount of Performance Security is 5% or as per the public finance circular 03/202(i) 3.1v dated11.01.2021of Initial Contract Price.

The Performance Security shall be valid till 28 days beyond expected completion date. It shall be an unconditional on demand guarantee obtained from a reputed Bank or Insurance Company in Sri Lanka. It is the contractor's responsibility to extend the validity of performance security till 28 days beyond any extended completion date without any notification of the employer. Employer will demand the performance guarantee without any notification for such failure of contractor to extend it.

37 Fees and types of reimbursable expenses to be paid to the adjudicator shall be on a case to case basis and shall be shared equally by the contractor and the employer.

The process of appointment of the adjudicator shall be made in accordance with the conditions of contract at a date during the contract when parties agree that such an appointment is worthwhile.

ORIGINAL

SECTION 3

CONDITIONS OF CONTRACT

Conditions of Contract Shall be Read in Conjunction with Contract Data, which shall take precedence over the Conditions of Contract

ORIGINAL

CONDITIONS OF CONTRACT : Conditions of Contract that will be applicable for this Contract is that given in Section – 03 of the Standard Bidding Document – Procurement of Works Major Contracts (ICTAD/SBD/02-2nd Edition , January 2007) published by the Institute for Construction Training and Development (ICTAD)(presently CIDA – Construction Industry Development Authority), "Savsiripaya", 123 , Wijerama Mawatha , Colombo 07.

Section 3, of this publication will not be issued with the Bidding Document and the Bidder is advised to purchase it from ICTAD. (Now CIDA – Construction Industry Development Authority)

ORIGINAL

SECTION 4

CONTRACT DATA

ORIGINAL

Contract Data

Conditions of contract Clause Number/s	Entry
1.1.2.2 & 1.3	**Employer's Name and Address** Name: Colombo Municipal Council Address: Town Hall, Colombo 7.
1.3	**Contractor's Name and Address** Name: ..... Address: .....
1.1.2.4 & 1.3	**Engineer's Name & Address** Name: Deputy Municipal Commissioner (Engineering Services) Address: Municipal Engineers' Department, Colombo Municipal Council, Town Hall, Colombo 7. 1.1.3.3 Time for completion is **420 days.**
1.1.3.7	Defects Notification period is **365 days.**
2.1	**Right to Access to Site:** 14 Days from the date of Letter of Acceptance.
4.2	**Amount of Performance Security:** The amount of Performance Security is 5% of Initial Contract Price and as per the public finance circular 03/202(i) 3.1v dated11.01.2021of Initial Contract Price. The Performance Security shall be valid till 28 days beyond expected completion date. It shall be an unconditional on demand guarantee obtained from a reputed Bank or Insurance Company in Sri Lanka. It is the contractor's responsibility to extend the validity of performance security till 28 days beyond

ORIGINAL

any extended completion date without any notification of the employer. Employer will demand the performance guarantee without any notification for such failure of contractor to extend it.

4.4 **Sub-Contractors:**

Contractor should employ a subcontractor of CIDA PB1 and Geotechnical engineer with M.Sc. in Geotechnical Engineering and experience in similar piling work of minimum 3 years for the piling work. Geotechnical engineer should be present at site until completion of the piling work.

8.7 **Liquidated damages for the works**

0.05% of the Initial Contract Price per day

Maximum will be 10% of Initial contract price

12.2 (b) **Method of Measurement**

Method of Measurement shall be SLS 573 : 1999 (First Revision)

13.4 (b) **Percentage for the adjustment of Provisional Sums**

10 % from the Basic Cost

13.7 **Weightings of Inputs (Not applicable)**

Indices No	Input Name	Input Percentage
.....	.....	.....
.....	.....	.....
.....	.....	.....

14.2 **Advance Payment**

Advance payment will be 20% of the initial contract price excluding provisional sums and contingencies. The Guarantee for the advance payment shall be an on demand unconditional Bank guarantee. This Bank Guarantee shall be obtained from a reputed Bank registered in Central Bank of Sri Lanka and it shall be valid till the advance payment is fully recovered by the employer. It is the contractor's responsibility to extend the validity of advance payment guarantee till full advance payment is recovered by the employer without any notification by the employer. Employer will demand the advance payment guarantee for

ORIGINAL

such failure of contractor to extend the guarantee without any notification.

14.3c **Percentage of Retention**

Retention percentage will be 10% from each payment.

Limit of Retention will be 5% on the initial contract price

14.5 **Minimum amount of Interim payment certificates**

Shall be **Rs. 10 Million**

14.8

Alternative method for payment of retention

On reaching the limit of retention, stated in the Contract Data under Sub Clause 14.3, the Contractor may substitute full retention money with an unconditional on demand Bank guarantee obtained from a reputed Bank registered in Central Bank to the Employer to the value equal to the full retention money, and valid up to 28 days beyond the end of Defect Notification Period. On receipt of such guarantee the Employer shall repay the full retention money. The guarantee will be released to the Contractor up on the certification of the Engineer that all defects notified by the Engineer to the Contractor before the end of this period have been corrected.

18.2 **Third Party Insurance Cover**

This shall be Rupees Rs. 200,000.00 minimum per occurrence and the number of occurrences shall be unlimited.

ORIGINAL

SECTION 5

STANDARD FORMS (CONTRACT)

- Letter of Acceptance
- Agreement
- Performance Security
- Advance Payment Security
- Retention Money Guarantee

ORIGINAL

Notes on Standard Forms:

- Bidders shall submit the completed Form of Bid Security/Bid Securing Declaration as appropriate in compliance with the requirements of bidding documents.
- Bidders should not complete the Form of Agreement at the time of preparation of bids.
- The successful bidder will be required to sign the Form of Agreement, after the award of contract.
- Any corrections or modifications to the accepted bid resulting from arithmetic corrections, acceptable deviations, or quantity variations in accordance with the requirements of the bidding documents should be incorporated into the Agreement.
- The Form of Performance Security, Form of Advance Payment Security and Form of Retention Money Guarantee should not be completed by the bidders at the time of submission of bids.
- The successful bidder will be required to provide these securities in compliance with the requirements herein or as acceptable to the Employer.

ORIGINAL

FORM OF LETTER OF ACCEPTANCE

[Letter heading paper of the procuring entity]

..... *[date]*

To: ---------- *[name and address of the Contractor]* ---------

This is to notify you that your bid dated ---------- *[insert date]* for the construction and remedying defects of the ---------- *[name of the Contract and identification number]* for the Contract price of ----------[*name of currency*]----------[*amount in figures and words]* as corrected in accordance with Instructions to Bidders and/ or modified by a Memorandum of Understanding, is hereby accepted.

You are hereby instructed to proceed with the execution of the said Works in accordance with the Contract documents.

The Commencement Date shall be: ..... *(fill the date as per Clause 8.1 of Conditions of Contract).*

The amount of Performance Security is : ..... *(fill the amount as per Clause 4.2 of Conditions of Contract).*

The Performance Security shall be submitted on or before ..... *(fill the date as per Clause 4.2 of Conditions of Contract).*

Authorized Signature : .....

Name and title of Signatory : .....

ORIGINAL

FORM OF AGREEMENT

This Agreement made the ..... *[day]* of ..... *[month]* 200..... *[year]*, between ..... *[name and address of Employer]* (hereinafter called and referred to as "the Employer"), of the one part, and ..... *[name and address of Contractor]* (hereinafter called and referred to as "the Contractor"), of the other part

Whereas the Employer desires that the Contractor execute ..... *[name and identification no of Contract](hereinafter called and referred to as "the Works")* and the Employer has accepted the Bid by the Contractor for the execution and completion of such Works and remedying of any defects therein.

The Employer and the Contractor agree as follows:

1. In this Agreement words and expressions shall have the same meanings as are respectively assigned to them in the Contract.

2. In consideration of the payments to be made by the Employer to the Contractor as indicated in this Agreement, the Contractor hereby covenants with the Employer to execute and complete the Works and remedy any defects therein in conformity in all respects with the provisions of the Contract.

3. The Employer hereby covenants to pay the Contractor in consideration of the execute and complete the Works and remedy any defects therein, the Contract Price or such other sum as may become payable under the provisions of the Contract at the times and in the manner prescribed by the Contract.

In Witness whereof the parties hereto have caused this Agreement to be executed the day and year aforementioned in accordance with laws of Sri Lanka.

.....	.....
Authorized signature of Contractor	**Authorized signature of Employer**
COMMON SEAL	COMMON SEAL

In the presence of
Witnesses :

1. Name and NIC No. .....
   Signature .....
   Address .....

2. Name and NIC No. .....
   Signature .....
   Address .....

ORIGINAL

FORM OF PERFORMANCE SECURITY

(Unconditional on demand)

----------*[Issuing Agency's Name, and Address of Issuing Branch or Office]*

Beneficiary: Municipal Commissioner, Colombo Municipal Council, Town Hall, Colombo 7

Date: ----------

PERFORMANCE GUARANTEE No.: ----------

We have been informed that----------*[name of Contractor]*(hereinafter called "the Contractor") has entered into Contract No. ---------- ---------- *[reference number of the contract]* dated---------- with you, for the----------*[insert "construction "]*of*[name of contract and brief description of Works]* (hereinafter called "the Contract").

Furthermore, we understand that, according to the Conditions of the Contract, a performance guarantee is required.

At the request of the Contractor, we----------*[name of Agency]* hereby irrevocably undertake to pay you any sum or sums not exceeding in total an amount of ---------- ---------- *[amount in figures]* (----------) *[amount in words]*, upon receipt by us of your first demand in writing accompanied by a written statement stating that the Contractor is in breach of its obligation(s) under the Contract, without your needing to prove or to show grounds for your demand or the sum specified therein.----------

This guarantee shall expire, no later than the.....day of....., 20.....*[insert date, 28 days beyond the Time for Completion]* and any demand for payment under it must be received by us at this office on or before that *date*.

[signature(s)]

ORIGINAL

FORM OF ADVANCE PAYMENT SECURITY

----------[Name and address of Agency, and Address of Issuing Branch or Office]----------
Beneficiary: Municipal Commissioner, Colombo Municipal Council, Town Hall, Colombo 7
Date: ----------

ADVANCE PAYMENT GUARANTEE No.: ----------

We have been informed that ---------- *[name of Contractor]* (hereinafter called "the Contractor") has entered into Contract No.---------- *[reference number of the contract]* datedwith you, for the ----------construction of ---------- *[name of contract and brief description]* (hereinafter called "the Contract").

Furthermore, we understand that, according to the conditions of the Contract, an advance payment in the sum---------- *[amount in figures]* (----------) *[amount in words]* is to be made against an advance payment guarantee.

At the request of the Contractor, we---------- *[name of issuing agency]* hereby irrevocably undertake to pay you any sum or sums not exceeding in total an amount of ---------- *[amount in figures]* (----------) *[amount in words]* [51] upon receipt by us of your first demand in writing accompanied by a written statement stating that the Contractor is in breach of its obligation in repayment of the Advance Payment under the Contract.

The maximum amount of this guarantee shall be progressively reduced by the amount of the advance payment repaid by the Contractor.

This guarantee shall expire on ---------- [Insert *the date, 28 days beyond the Time of Completion].*

Consequently, any demand for payment under this guarantee must be received by us at this office on or before that date.

_____

[signature(s)]

ORIGINAL

FORM OF RETENTION MONEY GUARANTEE

---------- *[Issuing Agency's Name, and Address of Issuing Branch or Office]*

Beneficiary: Municipal Commissioner, Colombo Municipal Council, Town Hall, Colombo 7

Date: ----------

RETENTION MONEY GUARANTEE No.: ----------

We have been informed that ----------*[name of Contractor]*(hereinafter called "the Contractor") has entered into Contract No.---------- ---------- *[reference number of the contract]* dated with you, for the execution of----------*[name of contract and brief description of Works]* (hereinafter called "the Contract").

Furthermore, we understand that, according to the conditions of the Contract, when the works have being taken over and the first half of the Retention Money has been certified for payment, payment of the second half of the Retention Money may be made against a Retention Money guarantee.

At the request of the Contractor, we---------- *[name of agency]* hereby irrevocably undertake to pay you any sum or sums not exceeding in total an amount of ---------- *[amount in figures]* (---------- ---------- ----------) *[amount in words]*[52] upon receipt by us of your first demand in writing accompanied by a written statement stating that the Contractor is in breach of its obligation under the Contract because the Contractor has not attended to the defects in accordance with the Contract.

This guarantee shall expire, at the latest, ---------- *[insert 28 Days after the end of the Defects Liability Period]*. Consequently, any demand for payment under this guarantee must be received by us at this office on or before that date.

_____

[Signature(s)]

ORIGINAL

SECTION 6

SPECIFICATIONS

ORIGINAL

Particular Specification for Electrical Installation

General

If not specifically mentioned in the BOQ items following specifications would apply to the Electrical Installation

Work shall be done in accordance with specifications for electrical and mechanical works - ICTAD Publication No.SCA/8 of Aug.2000 (2nd Edition -Revised)

The whole installation shall be carried out according to CEB/IEE wiring regulations.

All electrical constructions should be according to IEE regulations (18th edition or later) and subject to the instructions of the electrical officer concerned. Jobs attend beyond condition will not be approved please.

All the equipment shall be prior approved by the Engineer.

All switches and socket outlets shall be plated type make "Clipsal", "Orange ", "Krypton" or any other approved equivalent complying with SLS1000:1993 for switches & SLS 1998: 1991 for socket outlets.

MCCB:- Schneider, ABB, Siemens, Hager, LS or approved equivalent.

MCB'S & RCCB'S:- Schneider , Siemens, Hager, ETN or approved equivalent.

Cable :- ACL, Kelani or approved equivalent.

Ceiling Fan:- K.D.K. or Japanese origins

Exhaust Fan:- K.D.K. or Japanese origins

LED Fittings/ Tube:-

LED luminaires shall be Philips or equivalent and the other lamps and fittings shall be orange or equivalent if not specifically mentioned at the BOQ item

If not specifically mentioned at the BOQ item; LED Luminaires Minimum efficacy at scotopic condition should be above 100 lumen/W Corelate colour temperature (CCT) should be above 4000K, (Cool White). Colour rendering index (CRI) should be above 70. Rated life time should be above 50,000 hrs.

All Fluorescent fittings shall be zinc coated steel sheet finished with powder coated to 0.45mm thickness complete with electronic choke (Make:-"Atco","BG" original or -Equivalent) starter and the tube should be Thron, Philips, or Osram.

Rate to include switch boxes, Rowl plugs, square pin plug base, Chromium plated M.S. chains, brass hooks, ceiling roses, holders and any other item necessary.

Distribution Board:- Shall be in surface mount metal enclosure fabricated With Zinc coated sheet metal of gauge not less than 1.5 mm total enclosed, with hinged door with protective cover plate for terminals, finished with powder coating of approved colour and components

All the M.C.C.B.'s, MCB's and RCCB's for the distribution boards should be purchased from the authorized agents or from their dealers and a certificate or invoice along with their Company seal and Part No., numbers and warranty should be produced at the time of payment.

Recommended Fabricators of Switch boards and Enclosures;

Elsteel, K.I.K. Lanka (Pvt) Ltd, Pubudu Engineering (pvt) Ltd, Richardsons Projects (pvt) Ltd, OS Project (Pvt) Ltd. (Orange), Or similar product

Warranty

If in case not specified separately Minimum 2 year warranty from the building handed over date shall be given for all electrical equipment. Warranty cards shall be submitted by the contractor to the Projects Engineer.

All light fittings shall be approved by the project architect/ electrical engineer prior to the installation

Cabling

Internal light wiring shall comply with the drawings and shall be in 230/440 volt single core PVC insulated copper cables
The 2 compartment trunking shall be used in the cases where both data and power lines are routed and the cost shall be distributed and included in the relevant point wiring item.
The contractor is also responsible for the coordination work for ELV installation with different parties when required.
The cable paths/trunking/conduits/casing shall be well matched to the interior arrangement and shall be hidden.
The all metal surfaces shall be bonded and earthed

Underground cabling

"Minimum depth of underground cable trenches shall be 600mm. Cable inside trench shall be covered with LT cable tiles of size 450mmx 200mm x 50mm (should be of grade 25)
50mm quarry dust layer should be laid inside the bottom of the trench and the cable should be placed over the top of it.
Another 50mm of quarry dust has to be laid covering the cable before placing the concrete tile.
Warning tape should be placed after filling the excavated soil layer on top of the concrete tile."

Earthing

Number of rods required to obtain the necessary earth resistance shall be determined by the contractor. Testing of earth resistance after installation shall be done by the contractor in the presence of the project Electrical Engineer/Technical officer. All costs for testing shall be borne by the contractor.

CEB supply

The contractor shall coordinate with the CEB throughout the work to avoid the delays in getting the power connection.

Air conditioning system specifications

Country of origin of the AC system shall be Japan, European. York or equivalent brand shall be provided.

The AC supplier shall be the authorized local agent in sri lanka and shall have 10 years or more in HVAC industry (Evidence shall be submitted).

The bidder shall include the copper and drain piping total cost (**not the** 5 meter standard cost) to the AC unit item cost and it shall cover the total supply and installation cost.
Inverter type shall be installed

Warranty
Warranty for the Compressor shall be Five years comprehensive or more and other equipment shall have one year comprehensive warranty

Maintenance
Free services in the first year and Service agreement after the first year shall be submitted

ORIGINAL

Particular Specification for Corrosion control approach

All steel structures shall be sufficiently and adequately protected from Corrosion / rusting and anti-corrosion system shall be as per International standard ISO 12944 or and ISO 9223. All shall refer to the Corrosivity Zones and be aware of the Loss of metals as specified in same. All shall refer to the Corresponding Corrosion zones and specified Minimum DFT (Dry Film Thickness) of the total paint Film. Engineer reserves the right to increase the DFT as per situational analysis.

Surface preparations

All ferrous Iron members shall be cleaned to ISO SA 2.5 surface standard Rz 40-70 Microns and free of all rusts and oils and contaminations. All Hot dip galvanized metals shall undergo Pre Chemical cleaning process Caustic cleaning / acid pickling / water rinsing and Fluxing prior Hot Dip galvanizing For Electro Galvanized Tubes and Box bars available in the market shall be free of Oil / Grease and contaminations by fresh water washing and using oil cleaners and Detergents. In Coastal areas surface contamination Salt Sea Breeze water soluble layers shall be fresh water washed and cleaned prior paint applications.

Selection of Coatings

As Colombo City is Sunny / Hot / Sea Coastal and Monsoonal Rains and preference will be given for Protective and marine Coatings and all concerned shall be responsible to obtain Engineers approval an submit Product Data sheets and safety data sheets

Here is good guidelines for selections

Primer coat for Marine City Conditions and dry hot temperatures of 100- 120 C

1) Product shall be of reputed Brands with availability of product data sheets to support the performance and volume solids preferred over 55%

2) Primers (1st coat) shall be suitable for applying DTM Direct to Metal of Ferrous and Nonferrous (Including GI) and guarantee adhesion.

3) Re-coatability is an essential criterion to prevent (Long Overcoating maximums) to prevent Inter-coat detachments

4) Surface Tolerance capability should be ideal for Sire applications

5) Per coat DFT above 75 Microns DFT to 200 Microns DFT without sagging

6) Each coat to have different colour code for Inter coat identification

7) Pot Life of Epoxy resin and Hardener shall be having higher period say 3 Hours

8) No need to use sweep blasting of Zinc coat or No need use Etching primer (Phosphoric acid) or adhesion promotion etching which burn reduce the Zinc coat .

ORIGINAL

Intermediate coat cum Priming coat for Marine City Conditions and dry hot temperatures of 100- 120 C

1) Product shall be of reputed Brands with availability of product data sheets to support the performance and volume solids preferred over 60%

2) Good Build up properties and Good adhesion.

3) Re-coatability is an essential criteria to prevent (Unlimited or Very Long Overcoating maximums) to prevent Inter-coat detachments

4) Surface Tolerance capability should be ideal for Sire applications

5) Per coat DFT above 75 Microns DFT to 150 Microns DFT without sagging

6) Each coat to have different colour code for Inter coat identification

7) Pot Life of Epoxy resin and Hardener shall be having higher period say 3 Hours

8) Good protections from Mild chemicals / and other corrosive external elements.

Finish coat cum Coatings for Marine City Conditions and dry hot temperatures of 100- 120 C

1) Product shall be of reputed Brands with availability of product data sheets to support the performance and volume solids preferred over 54%

2) Good Build up properties and Good adhesion.

3) Re-coatability is an essential criteria to prevent (Unlimited or Very Long Overcoating maximums) to prevent Inter-coat detachments

4) Good colour retention / Good colour retention / for site applications

5) Per coat DFT above 55 Microns DFT to 60 Microns DFT without sagging

6) Each coat to have different colour code for Inter coat identification

7) Pot Life of Epoxy resin and Hardener shall be having higher period say 3 Hours

8) Good protections from Ultra-Violent Radiations and Mild chemicals / and other corrosive external elements .

Low solid products should be avoided as to achieve the Total DFT within 3 – 4 Coats.

For all purposes it is prudent to obtain certificate for all skilled paint applicators from Paint Manufacture's Training program as to achieve expected performance criteria. They should be knowledgeable to execute the correct procedures and should be able to read understand and execute the product data sheets and manufacturer's recommended procedures as approved the CMC Engineer.

Procedure to check and measure the DFT on the metal of the paint thickness should be a important responsibility for the advantage of all parties concerned. Please specify the agreed procedure.

ORIGINAL

GEOTECHNICAL ENGINEERING DIVISION

NBRO

NATIONAL BUILDING RESEARCH ORGANIZATION

COLOMBO MUNICIPAL COUNCIL

GEOTECHNICAL INVESTIGATION FOR SIX STORIED BUILDING AT WELLAWATHTHA

FINAL REPORT

DECEMBER 2017

GEOTECHNICAL ENGINEERING DIVISION
NATIONAL BUILDING RESEARCH ORGANISATION
Tele. +94-11-2588946, Fax. +94-11-2502611.
99/1, Jawatta Road, Colombo 05, Sri Lanka.
e-mail: nbro@sltnet.lk.

ORIGINAL

ORIGINAL

TABLE OF CONTENT

68

1. INTRODUCTION

It is intended to construct a six-storied building at Cooray Park, Wellawatta to utilize as a pavilion and a sports complex. Hence, Director/ Engineering, Traffic design and Road safety division of Colombo Municipal Council, has requested National Building Research Organization (NBRO) to conduct the soil investigation for the site, selected for the proposed construction and to provide Geotechnical Investigation report including recommendation for suitable type of foundation for construction of six storied building.

In response to his request, NBRO submitted an initial cost estimate on 23rd June 2017 for the same. Upon the acceptance of our financial proposal, Colombo Municipal Council was made the advance payment to the job on 24th July 2017. Consequently, the field work for the above investigation was commenced on 30th of August and completed by 15th September 2017.

The information of subsurface condition given in this report is based on the site reconnaissance, field investigation, laboratory testing and analysis.

2. OBJECTIVES

The objective of the geotechnical investigation was to provide information on subsurface conditions at the site and to determine the parameters pertaining to foundation recommendations for construction of six storied building.

3. SCOPE OF WORK

The scope of work as per the client is given below.

- Advancing two numbers (2 Nos.) of boreholes at the site using core drilling technique to establish the soil profile at the site
- Conducting Standard Penetration Tests (SPT) at 1.0m depth intervals.
- Collecting of undisturbed samples, if any soft layers encountered.
- Conducting laboratory tests for selected samples.
- Data analysing and preparation of the final report with recommendation for foundation design.

4. PROPOSED STRUCTURE

According to the information provided by the client, it is proposed to construct a six-storied building. Structural details such as service column loads and exact dimensions of the building footprint were not available at the time of the preparation of this report.

5. SITE RECONNAISSANCES

5.1. Location of proposed site

The site for the proposed constructions is situated within the premises of Cooray park, Wellawatte. It is accessible from Maheshwari road and Peterson road at Colombo 06. The specific location is about 500m away from the A2, Colombo - Galle road. Refer **Figure 5.1** in below.

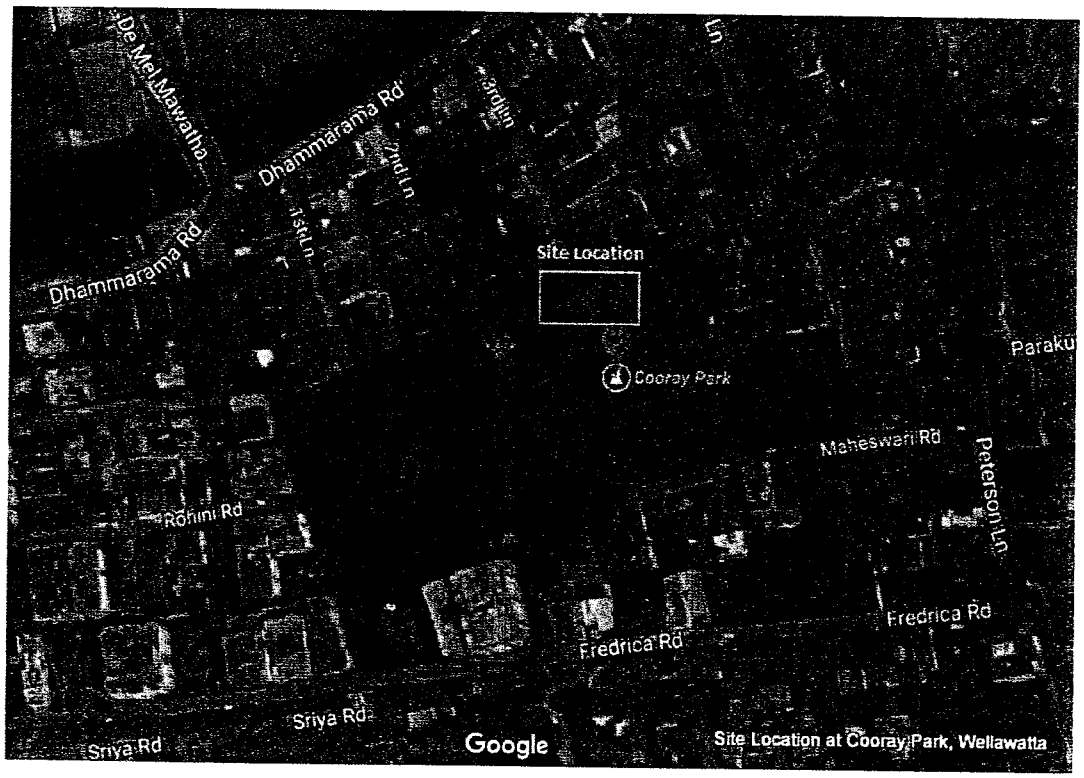

Figure 5.1 Site location

5.2. Site and General Environment

The proposed land area for construction is flat and was occupied by a single-storied pavilion building which will be demolished prior to commence the constructionof the proposed new building. The **Figure 5.2** below shows the borehole locations within the proposed area for constructions.

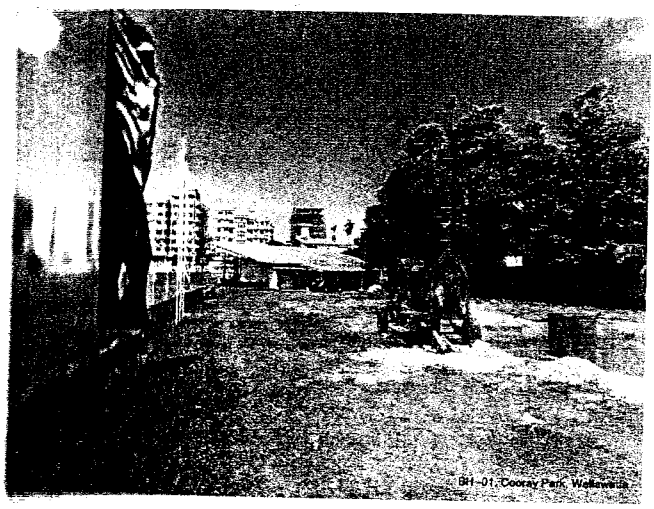

Figure 5.2: Proposed area for construction

FIELD INVESTIGATIONS

6.1. Codes and standards

All field and laboratory tests were carried out in accordance with the following specifications.

BS 5930	British Standard for Site Investigation
BS 1377	British Standard for Field & Laboratory testing

6.2. Level of supervision

The field work for the soil investigation was carried out under the overview of project engineer and technical officer of NBRO who is responsible for nominating and directing all sampling and providing field logs of the soil profiles encountered.

6.3. Drilling

The objective of the drilling was to obtain geo-technical information and to grasp the sub-soil conditions. Two (02) numbersof boreholes were drilled using core drilling technique at the locations shown in **Figure I** in **Appendix I**. Core drilling technique was adopted to advance all the boreholes and Bentonite slurry was utilized to eliminate the collapsing of walls of the boreholes.

Details of boreholes advanced at the site are summarised in **Table 6.1.** The logs of boreholes are attached in **Appendix II**.

Table 6.1: Summary of borehole investigation at the site

Description	Borehole No.	
	BH 01	BH 02
Date of Drilling	31/08/2017 – 09/09/2017	11/09/2017 –14/09/2017
Depth of Termination (m)	31.70 m	25.15 m
Depth of ground water level (m)	0.95 m	0.75 m
Thickness of drilling through overburden (m)	27.50 m	25.15 m
Thickness of drilling through rock (m)	4.20 m	-

6.4. Standardpenetration tests

Standard Penetration Tests (SPTs) were conducted within the boreholes at every 1.0m depth intervals. Log of the borehole along with the explanation sheets describing the terms and symbols used and the graphical representation of SPT values is presented in **Appendix II**.

For the purpose of preparing the log of borehole, compactness/consistency was classified according to the following **Table 6.2 & Table 6.3.**

Table 6.2: Cohesion less soil

Compactness	SPT No.
Very loose	0 - 4
Loose	4 - 10
Medium dense	10 - 30
Dense	30 - 50
Very dense	>50

Table 6.3: Cohesive soil

Consistency	SPT No.
Very soft	0 - 2
Soft	2 - 4
Firm	4 - 8
Stiff	8 - 15
Very Stiff	15 - 30
Hard	>30

6.5. Soil sampling and classification

Disturbed soil samples were collected at every 1.0m depth intervals in borehole by using the split spoon sampler having a sharp cutting edge at its lowered end is forced into the ground by dynamic impact. Visual classification of the soils was done in the field in accordance with British Standard by NBRO personnel.

Undisturbed soil sample where the soft soil was encountered at the depth of 3.00 – 3.70 m at BH02 was collected to assess the settlement characteristics of the soil.

6.6. Ground Water Table

Ground water table of the borehole was observed during the period of field investigation. Then, depth of water table was measured from the ground surface and recorded in all borehole logs in **Appendix II**. The level of water table was measured daily and recorded before boring to be continued next day morning.

6.7. Soil Profile

Logs of the boreholes along with the explanation sheets describing the terms and symbols used are given in **Appendix II**. The borehole logs also include the SPT results from the field.The vertical subsoil profiles through boreholes are given on **Figure II** in **Appendix I**.

7. LABORATORY TESTING

All laboratory tests of soils were carried out under the supervision of Laboratory Engineer in accordance with BS standards for representative disturbed soil samples.

7.1. Index Property Tests

Following tests were carried out on disturbed soil samples to determine the index properties of the soil encountered at the site.

- Sieve Analysis
- Atterberg Limits
- Natural Moisture Content

7.2. Geo-mechanical Tests

Following geo mechanical tests were carried out to undisturbed soil sample collected from BH 02.

- Consolidation Test
- Unconsolidated Undrained test (UU)

7.3. Uniaxial Compressive Strength (UCS) Tests on Rock

Rock sample collected from borehole location BH 01 at a depth of 27.50 m – 27.70 m was used to conduct Uniaxial Compressive Strength test to obtain the compressive strength of the rock.

The summary of test results is given in **Table 1** in **Appendix III** and details of the tests results are given in **Appendix IV**.

8. ENGINEERING APPRECIATION OF SUB SOIL CONDITIONS

8.1. Subsurface Condition

The layers in the subsurface may be identified as given below. The thickness of different layers at the borehole locations are given in **Table 8.1**.

Layer 1	-	Medium dense clayey SAND/ silty SAND (Top Soil)
Layer 2a	-	Firm sandy CLAY
Layer 2b	-	Medium dense to dense silty SAND
Layer 3a	-	Very soft to firm organic SILT/ PEAT
Layer 3b	-	Loose silty SAND
Layer 4	-	Loose to medium dense clayey SAND/ silty SAND
Layer 5	-	Medium dense to very dense silty SAND
Layer 6	-	Stiff to very stiff sandy CLAY/ CLAY
Layer 7	-	Medium dense to very dense silty SAND (Completely Weathered Rock)
Layer 8	-	Moderately weathered BIOTITE GNEISS

Table8.1: Thickness of the different layers at the borehole locations and the observed SPT

BH 01				BH 02			
From	To	N_{avg}	Layer	From	To	N_{avg}	Layer
0.00	0.80	15	Layer 1	0.00	0.45	22	Layer 1
0.80	2.00	7	Layer 2a	0.45	1.75	17	Layer 2b
2.00	5.00	28	Layer 2b	1.75	4.65	1	Layer 3a
5.00	6.00	8	Layer 3a	4.65	5.75	6	Layer 3
6.00	12.50	18	Layer 4	5.75	7.00	1	Layer 3a
12.50	22.00	45	Layer 5	7.00	8.45	9	Layer 4
22.00	26.00	13	Layer 6	8.45	18.75	35	Layer 5
26.00	27.50	30	Layer 7	18.75	24.00	16	Layer 6
				24.00	25.15	45	Layer 7
Borehole terminated at depth of 31.70 m				Borehole terminated at depth of 25.15 m			

The assumed vertical ground profiles through boreholes were drawn and are shown in **Figure II** in **Appendix I**.

8.2. Condition of the Bedrock

Bedrock was cored at locations of BH 01 and the reported Core Recovery (CR) and Rock Quality Designation (RQD) of the rock are given in **Table 8.2**.

Table 8.2: Quality of the bedrock

BH 01				
Depth (m)		CR (%)	RQD (%)	Layer
From	To			
27.50	29.00	67	20	Layer 8
29.00	30.50	53	6	
30.50	31.70	70	25	

9. INTERPRETATIONS OF THE RESULTS OF THE SITE INVESTIGATION

9.1. Soil Strength and Compressibility Parameters

The energy method of SPT correction (Bowles, 1996) was used to estimate the soil strength parameters of the soil layers. The energy method of SPT correction uses the following relationship to determine the N'_{70} from the field SPT blow counts (N_{Field}):

$$N'_{70} = N_{Field} C_N \eta_1 \eta_2 \eta_3 \eta_4$$

Where

$$C_N = \sqrt{\frac{95.76}{P'_o}} \quad \eta_1 = \frac{E_r}{70}$$

P'_o = Effective overburden pressure at the test level

E_r = Efficiency of the hammer used (taken as 55%)

η_i = Modification factors (Bowles, 1996)

The estimated N'_{70} together with the particle size can be used to estimate the soil strength parameters at respective depths. The estimated soil strength parameters are drained (with drainage) parameters for sand and undrained (without drainage) parameters for clay. **Table 9.1** gives the estimated soil strength parameters from the SPT as outlined above with the corresponding observed soil types present at the SPT locations.

Table 9.1: Soil strength parameters with the depth at the locations of the borehole

Depth (m)	BH 01						BH 02					
	Corrected N'_{70}	Drained		Undrained	Soil type	State	Corrected N'_{70}	Drained		Undrained	Soil type	State
		ϕ' (deg)	c' (kPa)	c_u (kPa)				ϕ' (deg)	c' (kPa)	c_u (kPa)		
0.30	38	38			SC	M.dense	55	40			SM	M.dense
1.30	9			40	CS	Firm	23	35			SM	M.dense
2.30	23	35			SM	M.dense	1			5	MHO	V.soft
3.30	44	39			SM	Dense	0			5	MHO	V.soft
4.30	25	35			SM	M.dense	1			5	Pt	V.soft
5.30	8			35	MIO	Firm	6	29			SM	Loose
6.30	11	31			SM	M.dense	1			5	Pt	V.soft
7.30	30	36			SM	Dense	4	28			SC	Loose
8.30	16	33			SM	M.dense	11	31			SC	M.dense
9.30	13	32			SM	M.dense	23	35	5		SM	M.dense
10.30	11	31			SM	M.dense	20	34	5		SM	M.dense
11.30	11	31			SC	M.dense	19	34	5		SM	M.dense
12.30	13	32			SC	M.dense	26	35	5		SM	Dense
13.30	35	37	10		SM	V.dense	28	36	5		SM	Dense
14.30	34	37	10		SM	V.dense	22	35	5		SM	Dense
15.30	27	36	5		SM	Dense	25	35	5		SM	Dense
16.30	32	36	10		SM	V.dense	32	36	10		SM	V.dense
17.30	31	36	10		SM	V.dense	32	36	10		SM	.dense
18.30	20	34	5		SM	Dense	31	36	10		SM	V.dense
19.30	27	35	5		SM	Dense	8			35	CV	Stiff
20.30	29	36	10		SM	V.dense	9			40	CV	V.stiff
21.30	28	36	10		SM	V.dense	13			60	CV	V.stiff
22.30	7			30	CS	Stiff	8			35	CV	Stiff
23.30	7			30	CS	Stiff	8			35	CV	V.Stiff
24.30	6			25	CS	Stiff	23	35	10		SM	Dense
25.30	8			35	CS	V.stiff						
26.30	10	31	10		SM	M.dense						
27.30	25	35	10		SM	V.dense						

The layers 2a, 3a and 6 may show consolidation behaviour. Consolidation tests were carried out only for the layer 3a and for layers 2a and 6 could not performed due to unfeasibility of undisturbed soil sampling and hence, following design consolidation properties are assumed in giving the foundation recommendations and are also given in **Table 9.2**.

Table 9.2: Consolidation properties of soil layers

Layer	$Cc/(1 + e_0)$	OCR
Layer 2a	0.20	NC
Layer 3a	0.50	NC
Layer 6	0.10	NC

9.2. Properties of the Bedrock

The bedrock is classified into five groups depending on the reported core recovery (CR), rock quality designate (RQD) and unconfined compression strength (UCS). The rock mass rating (RMR), estimated based on the system proposed by Bieniawski (1989), is also used as guidance in the determination of the grade of the bedrock. The guidelines used to determine the grade of rock is given in **Table 9.3**.

Table 9.3: Rock classification system used

Grade	Description	Lithology	Approximate range of RMR
Grade I	Fresh rock	Clean rock	$60 \leq RMR$
Grade II	Slightly weathered rock	Increased fractures	$50 \leq RMR < 60$
Grade III	Moderately weathered rock	Partly changed to soil; rock > soil	$35 \leq RMR < 50$
Grade IV	Highly weathered rock	Partly changed to soil; rock < soil	$RMR < 35$
Grade V	Completely weathered rock	Some remnant rock structure; completely weathered to soil	-

Grades of the rock for BH 01 are given in **Table 9.4**.

Table 9.4: Rock Grade for BH 01

Depth (m)		Grade of rock
From	To	
27.50	29.00	Grade III
29.00	30.50	Grade III
30.50	31.70	Grade III

10. FOUNDATION RECOMMENDATIONS

The proposed structure is a six-storied building.Preceding section indicates that the shallow subsurface consists of weak and compressible soft soil layer down to depth of about 7.0 m which has very low bearing capacity and high compressibility. Further, the subsoil profile highly fluctuates with varied soft soil thickness within the area covered by the borehole locations. Hence, deep foundation can be recommended for the foundation of the proposed structure.

10.1. Deep Foundation

10.1.1. Carrying Capacities of Bored Piles

10.1.1.1. Skin friction

Soil layers

The subsurface of site location consists of soft and weak soil layers up to the bed rock level. Therefore, the effect of negative skin friction should be considered for all compressible layers. The ultimate skin friction and the possibility of negative skin friction of soil layers at the location of BH 01 are given in **Table 10.1**.

Table 10.1: The ultimate skin frictionand the possibility of negative skin friction of soil layers at the location BH 01

Layer	Depth (m)		Total ultimate skin friction (kPa)	Possibility of negative skin friction
	From	To		
Medium dense clayey SAND/ silty SAND (Top Soil)	0.00	0.80	Not considered for the design purposes	Yes
Firm Sandy CLAY	0.80	2.00		Yes
Medium dense to dense silty SAND	2.00	5.00		Yes
Very soft to firm organic SILT	5.00	6.00		Yes
Loose to medium dense silty SAND/ clayey SAND	6.00	10.60		No
Medium dense to very dense silty SAND	12.50	22.0		No
Stiff to very stiff sandy CLAY	22.0	26.00		No
Medium dense to very dense silty SAND	26.0	27.50		No

Bedrock

The ultimate skin friction of the socketed region of the piles are estimated based on Tomlinson (1994) and ICTAD/DEV/15. It is generally assumed that bentonite slurry is used during drilling the pile bore. The estimated ultimate skin friction values of the bedrock at the location of BH 01 are given in **Table 10.2.**

Table 10.2: Estimated ultimate skin friction of the bedrock at the location of BH 01

Depth (m)		Grade of rock	Ultimate skin friction (kPa)
From	To		
27.50	29.00	GradeIII	200
29.00	30.50	Grade III	150
30.50	31.70	Grade III	200

10.1.1.2. End bearing

Bedrock

The allowable end bearing capacity of bed rock is estimated based on ICTAD/DEV/15, and Hong Kong Guidelines (2006). The estimated **allowable** end bearing capacity values of the bedrock at the location of BH 01 are given in **Table 10.3.**

Table 10.3: Estimated **allowable** end bearing capacity values of the bedrock at the location of BH 01.

Depth (m)		Grade of rock	Allowable end bearing capacity (kPa)
From	To		
27.50	29.00	Grade III	2250
29.00	30.50	Grade III	1750
30.50	31.70	Grade III	2250

10.2. General comments

- It should also be noted that construction equipment induces vibration into the ground and could have adverse effects such as damage to existing buildings/services.
- Vibration mitigation measures may need to be adopted to reduce the risk. Trials with instrumentation prior to construction would provide valuable information to take necessary action required.

11. SUMMARY OF RECOMMENDATIONS

- The soil strength parameters given in **Table 9.1** shall be recommended for the soil at different depths.
- The consolidation properties of soft soil layers given in **Table 9.2** shall be recommended for the soil at different depths.
- The strength parameters of the subsurface soil layers are given at each borehole location together with the ultimate skin friction from each layer.
- The recommended carrying capacities of piles should be verified through pile load test(s) done on test pile(s).
- Mobilized carrying capacity of piles depends heavily on the construction methodology and hence, a well-planned quality control programme during construction and a suitable post construction quality assurance testing programme should be adopted. In this regard, special attention should be paid to the termination criteria of piles in bedrock with variable weathering conditions. Further, cleaning of the pile bore for bored piles prior to concreting should also be performed appropriately.
- Depending on the number of piles installed and the results of the quality control tests, suitable number of piles should be subjected to integrity and load tests.
- Piles or pile groups should be also checked against the lateral load carrying capacity.
- If the type and scale of the proposed structure is changed in future (basement excavation if any), the recommendation should be revised accordingly.

ORIGINAL

105

Appendix I - Figures

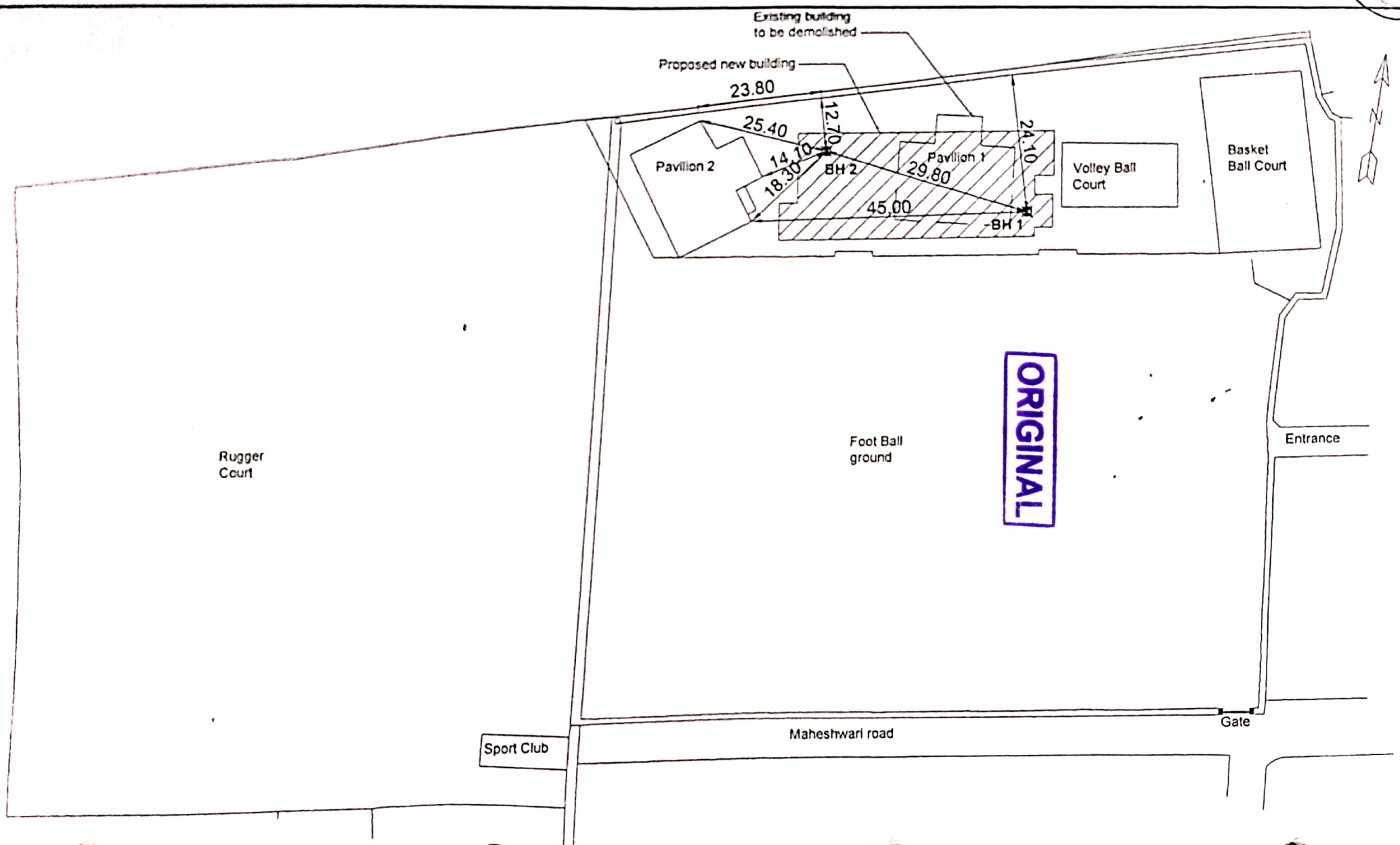

Figure 1:- Borehole Location Plan

(Soil investigation for proposed six storied pavilion building at Cooray Park, Wellawatta)

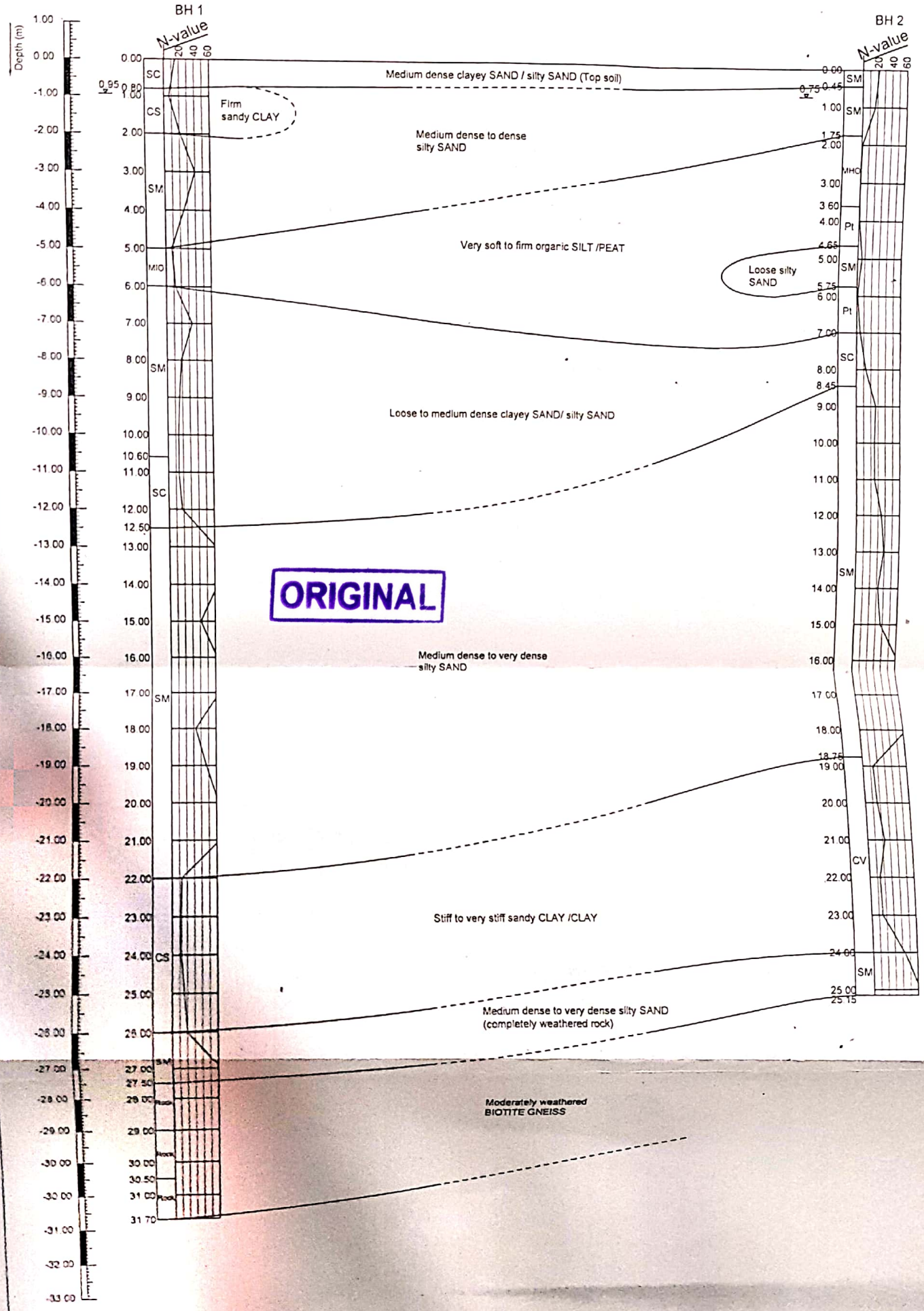

Figure II :- Assumed vertical ground profile through BH 1 & BH 2

(Soil investigation for proposed six storied pavilion building at Cooray Park, Wellawatte)

GC

ORIGINAL

GEOTECHNICAL ENGINEERING DIVISION
NATIONAL BUILDING RESEARCH ORGANIZATION

Appendix II - Logs of boreholes

ORIGINAL

BOREHOLE LOG

NATIONAL BUILDING RESEARCH ORGANISATION
GEOTECHNICAL ENGINEERING DIVISION
99/1, Jawatta Road, Colombo 05.

PROJECT	SOIL INVESTIGATION FOR PROPOSED SIX STORIED PAVILION BUILDING AT COORAY PARK, WELLAWATTA			CLIENT	COLOMBO MUNICIPAL COUNCIL	BOREHOLE NO	E
LOCATION	COORAY PARK, WELLAWATTA			CONTRACT NO	NBRO/GED/2017/30/25719 A	DEPTH OF HOLE (m)	3
DRILLING METHOD	CORE DRILLING			ELEVATION (m RL)		CHAINAGE / OFFSET	-
DRILL SIZE [mm]	54	CASING SIZE [mm]	76	CO-ORDINATES	N	DATE COMMENCED	3
UDS SIZE [mm*mm]	-	UDS SAMPLER SIZE [mm]	-		E	DATE COMPLETED	9

ELEVATION [m RL]	LAYER THICKNESS(m)	SAMPLE TYPE	SAMPLE NO	SOIL DESCRIPTION	STRATA	LEGEND	GWL	γ - [g/cm³] OTHER TESTS	DEPTH TESTED [m]	STANDARD PENETRATION TEST DATA: NUMBER OF BLOWS PER 15cm 1	2	3	'N'
				GROUND LEVEL									
	0.80	X		Clayey SAND, medium dense, blackish brown, fine to coarse grained, angular, presence of organic matter and plant roots, moist (top soil)	SC				0.00	7	7	8	15
	1.20	X		Sandy CLAY, firm, blackish brown, fine to medium grained sand, presence of organic matter, moist	CS		0.95m GWL, 10/9/2017		1.00	4	4	3	7
	3.00	X		Silty SAND, medium dense to dense, grey, fine to medium grained, presence of organic fines, moist	SM				2.00	8	10	11	21
	1.00	X		Organic SILT of intermediate plasticity, firm, dark grey, presence of fine to medium grained sand, moist	MIO				3.00	14	17	23	40
		X		Silty SAND, medium dense to dense, dark grey, fine to medium grained, presence of organic fines, moist	SM				4.00	13	13	12	25
									5.00	5	4	4	8
									6.00	4	6	6	12
									7.00	10	20	14	34
									8.00	14	11	8	19
									9.00	5	6	10	16
10.00													

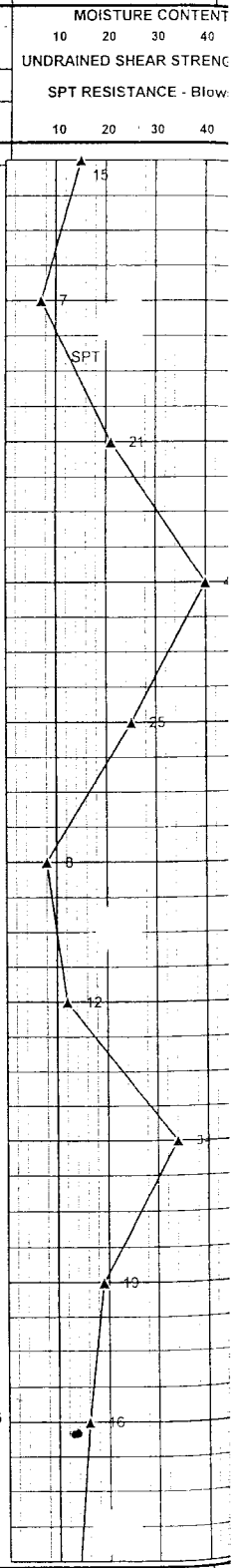

Natural moisture content, Atterberg Limits (LL, PL)	γ –Wet unit weight	W - Wash sample
SPT 'N', blows/ft	G -Grainsize Analysis	SPT - SPT Sample
Vane shear strength, peak	U - Unconfined compression	- Undisturbed sample
Vane shear strength, residual	CU - Consolidated undrained triaxial	- Disturbed Sample

Drilled By
Logged By
Date
Checked By

ORIGINAL

BOREHOLE LOG

NATIONAL BUILDING RESEARCH ORGANISATION
GEOTECHNICAL ENGINEERING DIVISION
99/1, Jawatta Road, Colombo 05.

SHEET NO 2 of 4

PROJECT	SOIL INVESTIGATION FOR PROPOSED SIX STORIED PAVILION BUILDING AT COORAY PARK, WELLAWATTA	CLIENT	COLOMBO MUNICIPAL COUNCIL	BOREHOLE NO	BH 1
LOCATION	COORAY PARK, WELLAWATTA	CONTRACT NO	NBRO/GED/2017/30/25719 A	DEPTH OF HOLE (m)	31.70
DRILLING METHOD	CORE DRILLING	ELEVATION (m RL)		CHAINAGE / OFFSET	-
CORE SIZE [mm]	54 / CASING SIZE 76	CO-ORDINATES	N	DATE COMMENCED	31/8/2017
CORE SIZE [mm*mm]	- / UDS SAMPLER SIZE [mm] -		E	DATE COMPLETED	9/9/2017

ELEVATION [m RL]	LAYER THICKNESS(m)	SAMPLE TYPE	SAMPLE NO.	SOIL DESCRIPTION	STRATA	LEGEND	GWL	γ - [g/cm³] OTHER TESTS	DEPTH TESTED [m]	STANDARD PENETRATION TEST DATA: NUMBER OF BLOWS PER 15cm 1	2	3	'N'
	4.60				SM				10.00	6	7	7	14
	1.90			Clayey SAND, medium dense, dark grey, fine to coarse grained, angular, presence of organic fines, moist	SC				11.00	7	6	8	14
									12.00	5	8	10	18
				Silty SAND, dense to very dense, greyish brown, fine to coarse grained, angular, presence of occasionally gravel, moist	SM				13.00	13	22	29	>50
									14.00	26	33	HB	>50
									15.00	11	18	23	41
									16.00	17	26	29	>50
									17.00	27	30	31	>50
									18.00	13	14	19	33
									19.00	17	27	20	47

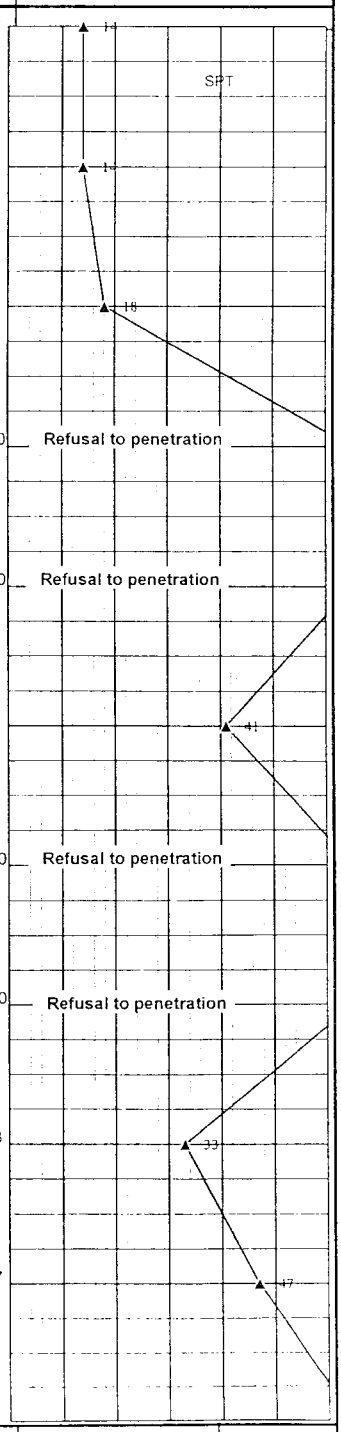

Natural moisture content, Atterberg Limits (LL, PL)
SPT 'N', blows/ft
Vane shear strength, peak
Vane shear strength, residual

γ - Wet unit weight
G - Grainsize Analysis
U - Unconfined compression
CU - Consolidated undrained triaxial

W - Wash sample
SPT - SPT Sample
Undisturbed sample
Disturbed Sample

Drilled By	MHMH
Logged By	WDBC
Date	25/9/2017
Checked By	DMDS

ORIGINAL

BOREHOLE LOG

NATIONAL BUILDING RESEARCH ORGANISATION
GEOTECHNICAL ENGINEERING DIVISION
99/1, Jawatta Road, Colombo 05.

PROJECT	SOIL INVESTIGATION FOR PROPOSED SIX STORIED PAVILION BUILDING AT COORAY PARK, WELLAWATTA	CLIENT	COLOMBO MUNICIPAL COUNCIL	BOREHOLE NO	BI
LOCATION	COORAY PARK, WELLAWATTA	CONTRACT NO	NBRO/GED/2017/30/25719 A	DEPTH OF HOLE (m)	31
DRILLING METHOD	CORE DRILLING	ELEVATION (m RL)		CHAINAGE / OFFSET	-
CORE SIZE [mm]	54 / CASING SIZE 76	CO-ORDINATES	N	DATE COMMENCED	31/
VANE SIZE [mm*mm]	- / UDS SAMPLER SIZE [mm] -		E	DATE COMPLETED	9/9

DEPTH	ELEVATION [m RL]	LAYER THICKNESS(m)	SAMPLE TYPE	SAMPLE NO.	SOIL DESCRIPTION	STRATA	LEGEND	GWL	γ - [g/cm³] OTHER TESTS	DEPTH TESTED [m]	STANDARD PENETRATION TEST DATA: NUMBER OF BLOWS PER 15cm 1	2	3	'N'
20.00					Silty SAND, dense to very dense, greyish brown, fine to coarse grained, angular, presence of occasionally gravel, moist	SM				20.00	18	27	31	>50
21.00										21.00	30	HB	-	>50
22.00		9.50			Sandy CLAY of intermediate plasticity, stiff, grey, presence of fine grained sand, moist	CS				22.00	6	7	6	13
23.00										23.00	6	6	6	12
24.00										24.00	6	6	6	12
25.00										25.00	8	8	8	16
26.00		4.00			Silty SAND, medium dense to very dense, grey, fine to coarse grained, angular, presence of completely weathered rock fragments, moist (completely weathered rock)	SM				26.00	8	10	10	20
27.00										27.00	30	HB	-	>50
27.50		1.50			Rock Level									
29.00					BIOTITE GNEISS, moderately strong, grey, fine to coarse grained, inequigranular, moderately weathered, highly fractured	Rock				27.50 / 29.00	Core Depth m: 27.50	Core Recovery %: 67	RQD %: 20	Return of Water %: 90
30.50		1.50			BIOTITE GNEISS, moderately strong, grey, fine to coarse grained, inequigranular, moderately weathered, highly fractured	Rock				29.00 / 30.50	29.00	53	6	90

MOISTURE CONTENT 10 20 30 40
UNDRAINED SHEAR STRENGT
SPT RESISTANCE - Blows/
10 20 30 40

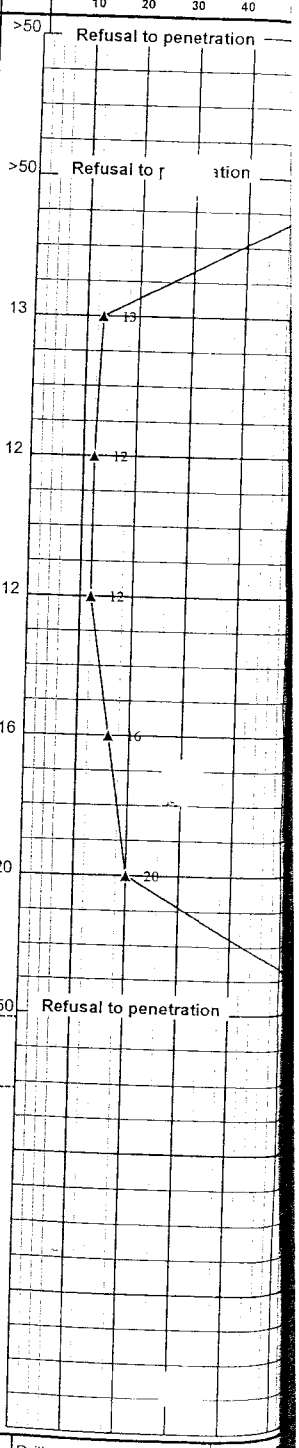

Natural moisture content, Atterberg Limits (LL, PL)
SPT 'N', blows/ft
Vane shear strength, peak
Vane shear strength, residual

γ -Wet unit weight
G -Grainsize Analysis
U - Unconfined compression
CU - Consolidated undrained triaxial

W - Wash sample
SPT - SPT Sample
- Undisturbed sample
- Disturbed Sample

Drilled By	MHM
Logged By	WDB
Date	25/9/20
Checked By	DMD

ORIGINAL

58

BOREHOLE LOG

NATIONAL BUILDING RESEARCH ORGANISATION
GEOTECHNICAL ENGINEERING DIVISION
99/1, Jawatta Road, Colombo 05.

SHEET NO. 4 of 4

PROJECT	SOIL INVESTIGATION FOR PROPOSED SIX STORIED PAVILION BUILDING AT COORAY PARK, WELLAWATTA	CLIENT	COLOMBO MUNICIPAL COUNCIL	BOREHOLE NO	BH 1
LOCATION	COORAY PARK, WELLAWATTA	CONTRACT NO	NBRO/GED/2017/30/25719	DEPTH OF HOLE (m)	31.70
DRILLING METHOD	CORE DRILLING	ELEVATION (m RL)		CHAINAGE / OFFSET	-
CORE SIZE [mm]	54 / CASING SIZE: 76	CO-ORDINATES	N	DATE COMMENCED	31/8/2017
LINE SIZE [mm*mm]	- / UDS SAMPLER SIZE [mm]: -		E	DATE COMPLETED	9/9/2017

ELEVATION [m RL]	LAYER THICKNESS(m)	SAMPLE TYPE	SAMPLE NO.	SOIL DESCRIPTION	STRATA	LEGEND	GWL	γ - [g/cm³]	OTHER TESTS	DEPTH TESTED [m]	Core Depth m	Core Recovery %	RQD %	Return of Water %	STANDARD PENETRATION TEST DATA: NUMBER OF BLOWS PER 15cm 1	2	3	'N'
	1.50				Rock						30.50 31.70	70	25	90				
	1.20			BIOTITE GNEISS, moderately strong, grey, fine to coarse grained, inequigranular, moderately weathered, highly fractured	Rock													
				Borehole terminated at 31.70m depth														

MOISTURE CONTENT - % 10 20 30 40 50 60
UNDRAINED SHEAR STRENGTH - kN/m² 10 20 30 40 50 60
SPT RESISTANCE - Blows/30 cm 10 20 30 40 50 60

Natural moisture content, Atterberg Limits (LL, PL)
SPT 'N', blows/ft
Vane shear strength, peak
Vane shear strength, residual

γ -Wet unit weight
G -Grainsize Analysis
U - Unconfined compression
CU - Consolidated undrained triaxial

W - Wash sample
SPT - SPT Sample
- Undisturbed sample
- Disturbed Sample

Drilled By	MHMH
Logged By	WDBC
Date	25/9/2017
Checked By	DMDS

ORIGINAL

BOREHOLE LOG

NATIONAL BUILDING RESEARCH ORGANISATION
GEOTECHNICAL ENGINEERING DIVISION
99/1, Jawatta Road, Colombo 05.

PROJECT	SOIL INVESTIGATION FOR PROPOSED SIX STORIED PAVILION BUILDING AT COORAY PARK, WELLAWATTA		CLIENT	COLOMBO MUNICIPAL COUNCIL	BOREHOLE NO
LOCATION	COORAY PARK, WELLAWATTA		CONTRACT NO	NBRO/GED/2017/30/25719 A	DEPTH OF HOLE (m)
DRILLING METHOD	CORE DRILLING		ELEVATION (m RL)		CHAINAGE / OFFSET
CORE SIZE [mm]	-	CASING SIZE [mm] 76	CO-ORDINATES	N	DATE COMMENCED
VANE SIZE [mm*mm]	-	UDS SAMPLER SIZE [mm] -		E	DATE COMPLETED

DEPTH [m]	ELEVATION [m RL]	LAYER THICKNESS(m)	SAMPLE TYPE	SAMPLE NO.	SOIL DESCRIPTION	STRATA	LEGEND	GWL	γ - [g/cm³] OTHER TESTS	DEPTH TESTED [m]	STANDARD PENETRATION TEST DATA NUMBER OF BLOWS PER 15cm 1	2	3	'N'
0.00					GROUND LEVEL									
0.45		0.45			Silty SAND, medium dense, brown, fine to medium grained, presence of plant roots, moist (top soil)	SM				0.00	11	11	11	22
1.75		1.30			Silty SAND, medium dense, brown, fine to medium grained, moist	SM		0.75m GWL, 15/9/2017		1.00	7	8	9	17
3.60		1.85			Organic SILT of high plasticity, very soft, black, presence of organic matter, moist *Note : Undisturbed sample was collected at same depth in same layer in additional borehole*	MHO				2.00 3.00 UDS 3.00-3.70	1 1	0 0	1 0	1 0
4.65		1.05			PEAT, very soft, black, presence of partially decomposed organic matter, moist	Pt				4.00	1	0	1	1
5.75		1.10			Silty SAND, loose, dark grey, fine to medium grained, presence of organic fines, moist	SM				5.00	3	3	3	6
7.00		1.25			PEAT, very soft, black, presence of fine grained sand and partially decomposed organic matter, moist	Pt				6.00	1	0	1	1
8.45		1.45			Clayey SAND, loose to medium dense, dark grey, fine to medium grained, presence of organic fines, moist	SC				7.00 8.00	2 3	2 5	3 8	5 13
10.00					Silty SAND, medium dense to very dense, grey, fine to coarse grained, angular, moist	SM				9.00	7	11	16	27

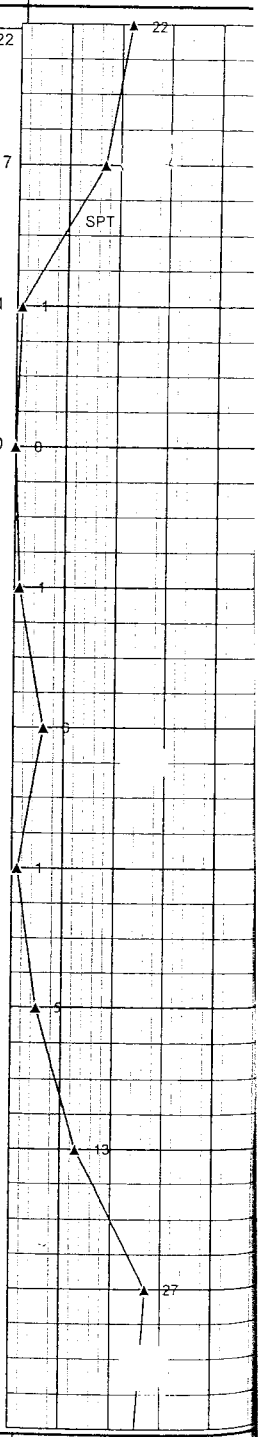

Natural moisture content, Atterberg Limits (LL, PL)
SPT 'N', blows/ft
Vane shear strength, peak
Vane shear strength, residual

γ -Wet unit weight
G -Grainsize Analysis
U - Unconfined compression
CU - Consolidated undrained triaxial

W - Wash sample
SPT - SPT Sample
Undisturbed sample
Disturbed Sample

Drilled By	
Logged By	
Date	
Checked By	

ORIGINAL

BOREHOLE LOG

NATIONAL BUILDING RESEARCH ORGANISATION
GEOTECHNICAL ENGINEERING DIVISION
99/1, Jawatta Road, Colombo 05.

SHEET NO. 2 of 3

PROJECT	SOIL INVESTIGATION FOR PROPOSED SIX STORIED PAVILION BUILDING AT COORAY PARK, WELLAWATTA	CLIENT	COLOMBO MUNICIPAL COUNCIL	BOREHOLE NO	BH 2
LOCATION	COORAY PARK, WELLAWATTA	CONTRACT NO	NBRO/GED/2017/30/25719 A	DEPTH OF HOLE (m)	25.15
DRILLING METHOD	CORE DRILLING	ELEVATION (m RL)		CHAINAGE / OFFSET	-
HOLE SIZE [mm]	- / CASING SIZE 76	CO-ORDINATES	N	DATE COMMENCED	11/9/2017
HOLE SIZE [mm*mm]	- / UDS SAMPLER SIZE [mm] -		E	DATE COMPLETED	14/9/2017

ELEVATION [m RL]	LAYER THICKNESS(m)	SAMPLE TYPE	SAMPLE NO.	SOIL DESCRIPTION	STRATA	LEGEND	GWL	γ - [g/cm³] OTHER TESTS	DEPTH TESTED [m]	STANDARD PENETRATION TEST DATA: NUMBER OF BLOWS PER 15cm 1	2	3	'N'
				Silty SAND, medium dense to very dense, grey, fine to coarse grained, angular, moist	SM				10.00	8	12	13	25
									11.00	10	11	14	25
									12.00	11	17	18	35
									13.00	14	16	23	39
									14.00	13	14	18	32
									15.00	20	19	18	37
									16.00	21	30	HB	>50
									17.00	29	HB	-	>50
									18.00	28	45	HB	>50
	10.30			CLAY of very high plasticity, stiff to very stiff, grey, presence of fine grained sand, moist	CV				19.00	7	7	7	14

MOISTURE CONTENT - % (10 20 30 40 50 60)
UNDRAINED SHEAR STRENGTH - kN/m²
SPT RESISTANCE - Blows/30 cm (10 20 30 40 50 60)

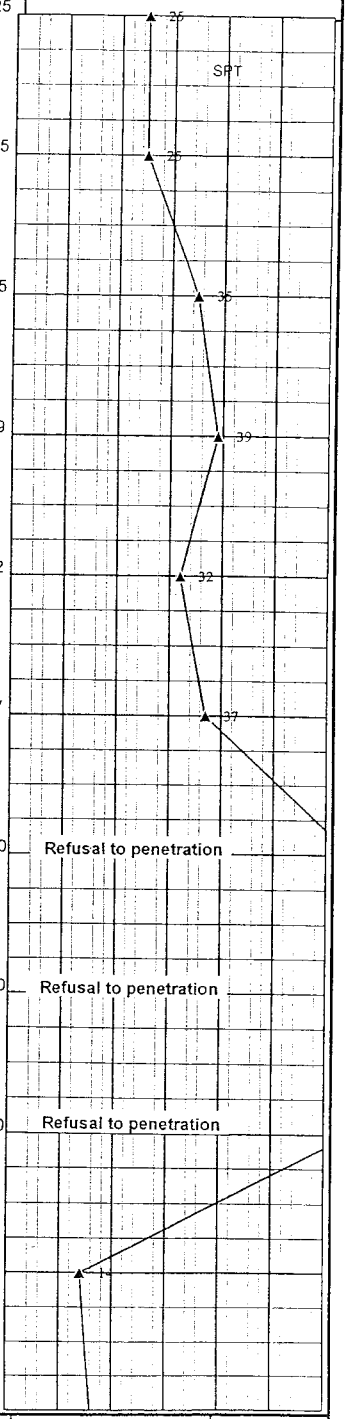

Natural moisture content, Atterberg Limits (LL, PL)	γ -Wet unit weight	W - Wash sample	Drilled By: MHMH
SPT 'N', blows/ft	G -Grainsize Analysis	SPT - SPT Sample	Logged By: WDBC
Vane shear strength, peak	U - Unconfined compression	- Undisturbed sample	Date: 25/9/2017
Vane shear strength, residual	CU - Consolidated undrained triaxial	- Disturbed Sample	Checked By: DMDS

ORIGINAL

BOREHOLE LOG

NATIONAL BUILDING RESEARCH ORGANISATION
GEOTECHNICAL ENGINEERING DIVISION
99/1, Jawatta Road, Colombo 05.

PROJECT	SOIL INVESTIGATION FOR PROPOSED SIX STORIED PAVILION BUILDING AT COORAY PARK, WELLAWATTA		CLIENT	COLOMBO MUNICIPAL COUNCIL	BOREHOLE NO
LOCATION	COORAY PARK, WELLAWATTA		CONTRACT NO	NBRO/GED/2017/30/25719 A	DEPTH OF HOLE (m)
DRILLING METHOD	CORE DRILLING		ELEVATION (m RL)		CHAINAGE / OFFSET
CORE SIZE [mm]	-	CASING SIZE 76	CO-ORDINATES	N	DATE COMMENCED
VANE SIZE [mm*mm]	-	UDS SAMPLER SIZE [mm] -		E	DATE COMPLETED

DEPTH [m]	ELEVATION [m RL]	LAYER THICKNESS(m)	SAMPLE TYPE	SAMPLE NO.	SOIL DESCRIPTION	STRATA	LEGEND	GWL	γ - [g/cm³] OTHER TESTS	DEPTH TESTED [m]	STANDARD PENETRATION TEST DATA: NUMBER OF BLOWS PER 15cm 1	2	3	'N'
20.00										20.00	7	8	8	16
21.00					CLAY of very high plasticity, stiff to very stiff, grey, presence of fine grained sand, moist	CV				21.00	8	10	13	23
22.00										22.00	7	7	7	14
23.00										23.00	8	7	8	15
24.00		5.25								24.00	9	20	23	43
					Silty SAND, dense to very dense, grey, fine to medium grained, presence of completely weathered rock fragments, moist	SM								
25.00					Hit Rock					25.00	53	HB	-	>50
25.15					Borehole terminated at 25.15m depth									
26.00														
27.00														
28.00														
29.00														
30.00														

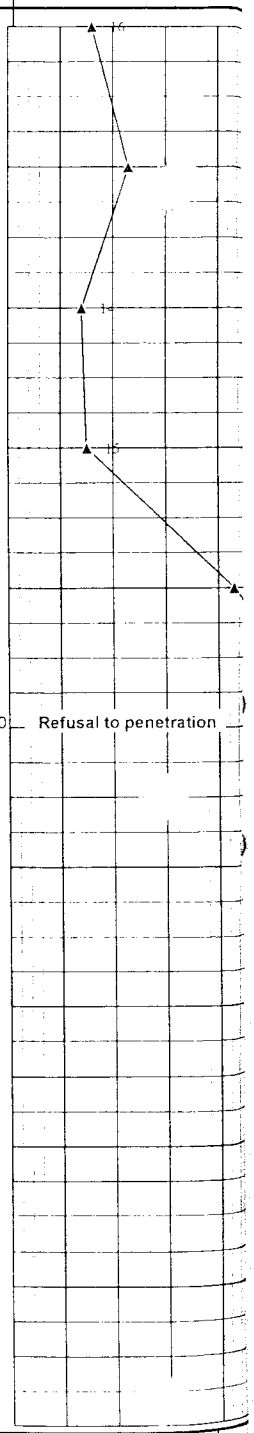

Natural moisture content, Atterberg Limits (LL, PL)
SPT 'N', blows/ft
Vane shear strength, peak
Vane shear strength, residual

γ - Wet unit weight
G - Grainsize Analysis
U - Unconfined compression
CU - Consolidated undrained triaxial

W - Wash sample
SPT - SPT Sample
Undisturbed sample
Disturbed Sample

Drilled By
Logged By
Date
Checked By

ORIGINAL

GEOTECHNICAL ENGINEERING DIVISION
NATIONAL BUILDING RESEARCH ORGANIZATION

Appendix III – Summary of Laboratory Tests Results

NATIONAL BUILDING RESEARCH ORGANISATION
GEOTECHNICAL ENGINEERING DIVISION

TABLE 1 - SUMMARY OF TEST RESULTS

Sheet No 1 of 1

Job Ref. 30/25719 A

PROJECT : SOIL INVESTIGATION FOR PROPOSED SIX STORIED PAVILION BUILDING AT COORAY PARK, WELLAWATTA

Laboratory Sample No.	Client Reference	Soil classification	Natural Moisture Content %	Specific Gravity	Grain Size Distribution Gravel %	Sand %	Silt %	Clay %	Atterberg Limits LL %	PL %	PI %	Triaxial test/ Unconsolidated Undrained C_u kPa	ϕ_u Deg.	Consolidation test C_c	P_c kPa	Direct shear C kPa	ϕ Deg.
For Clay Sample																	
BH 2	0.00-0.45	SC	25		13	63	24		34	20	14						
	1.00-1.45	CS	43		0	43	57		39	22	17						
	2.00-2.45	SM	17		0	94	6										
	5.00-5.45	MIO	32		6	57	37										
	11.00-11.45	SC	21		5	75	20										
	22.00-22.45	CS	36		6	32	62		42	21	21						
BH 2	3.00-3.45	MHO	89		27	35	38		56	32	24						
	3.00-3.70		352									11-22	0	5.77	40		
	7.00-7.45	SC	31		1	69	30		59	27	32						
	21.00-21.45	CV	50		0	8	92										

Laboratory Sample No.	Client Reference	Soil classification	Natural Moisture Content %	Specific Gravity	Grain Size Distribution (1) %	(2) %	(1) %	(2) %	Atterberg Limits LL %	PL %	PI %	Triaxial test/ Unconsolidated Undrained C_u kPa	ϕ_u Deg.	Consolidation test C_c	P_c kPa	Direct shear C kPa	ϕ Deg.
For Peat Samples																	
BH 2	4.00-4.45	Pt	114		17	75	8										
BH 2	6.00-6.45	Pt	155		28	45	27										

No. (1) Percentage of organic matter greater than 4.75 mm (2) Percentage of organic matter greater than 0.075 mm

(3) Percentage of organic matter passing through 0.075 mm (4) Clay content

ORIGINAL

GEOTECHNICAL ENGINEERING DIVISION
NATIONAL BUILDING RESEARCH ORGANIZATION

Appendix IV - Details of Laboratory Tests Results

NATIONAL BUILDING RESEARCH ORGANISATION

GEOTECHNICAL ENGINEERING DIVISION

PARTICLE SIZE DISTRIBUTION CURVE - SOIL INVESTIGATION FOR PROPOSED SIX STORIED PAVILION BUILDING AT COORAY PARK, WELLAWATTA

Job Ref.	30/25719 A
Client	Colombo Municipal Council

Test Method: BS 1377 : 1990 (Part 2) : Clause 09

Cobble	GRAVEL			SAND			SILT	CLAY
	Coarse	Medium	Fine	Coarse	Medium	Fine		

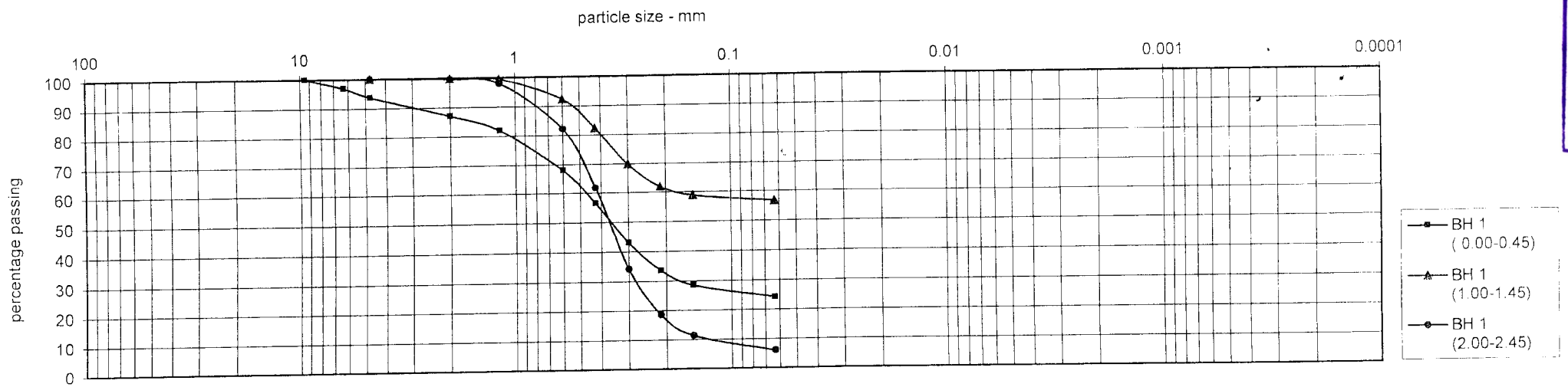

Location	Laboratory Sample No.	Borehole No.	Depth (m)	Classification	Liquid Limit	Plastic Limit	Plasticity Index	Cobble (%)	Gravel (%)	Sand (%)	Silt & Clay (%)	Clay (%)	Remarks
	GEL/2017/00684	BH 1	0.00-0.45	SC	34	20	14		13	63	24		
	GEL/2017/00685	BH 1	1.00 - 1.45	CS	39	22	17		0	43	57		
	GEL/2017/00686	BH 1	2.00 - 2.45	[illegible]					0		6		

ORIGINAL

NATIONAL BUILDING RESEARCH ORGANISATION
GEOTECHNICAL ENGINEERING DIVISION
Job Ref.
Client
Colombo Municipal

CERTIFIED BY : WDBC

NATIONAL BUILDING RESEARCH ORGANISATION

GEOTECHNICAL ENGINEERING DIVISION

PARTICLE SIZE DISTRIBUTION CURVE - Soil Investigation for [redacted] Building at Cooray Park, Wellawattha

Job Ref. 25719 A

Client Colombo Municipal Council

Test Method BS 1377 : 1990 (Part 2) : Clause 09

Cobble	GRAVEL			SAND			SILT	CLAY
	Coarse	Medium	Fine	Coarse	Medium	Fine		

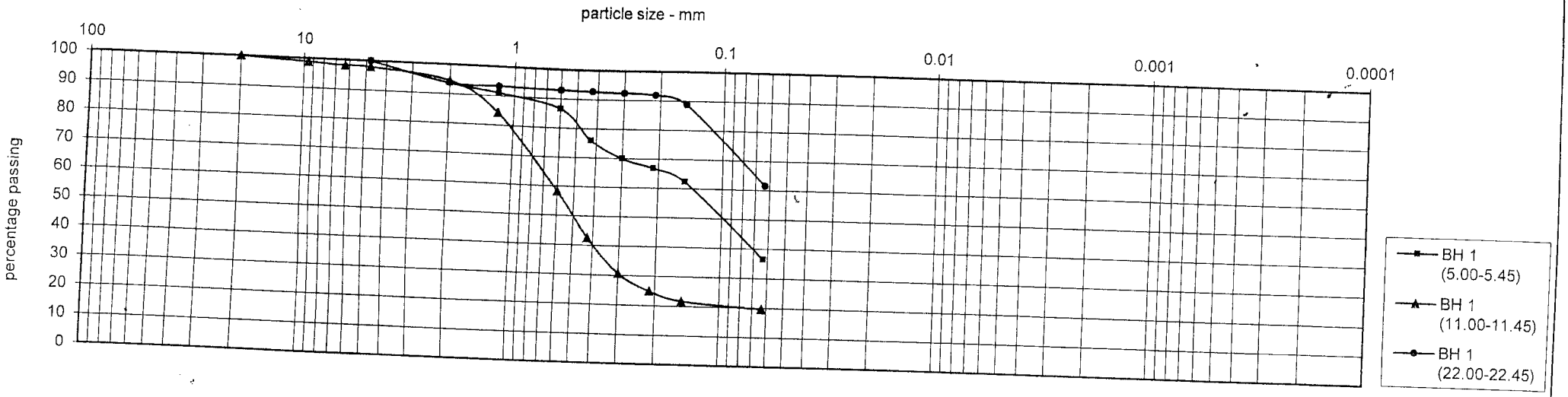

Location	Laboratory Sample No.	Borehole No	Depth (m)	Classification	Liquid Limit	Plastic Limit	Plasticity Index	Cobble (%)	Gravel (%)	Sand (%)	Silt & Clay (%)	Clay (%)	Remarks
	GEL/2017/00687	BH 1	5.00-5.45	MIO					6	57	37		
	GEL/2017/00688	BH 1	11.00-11.45	SC					5	75	20		
	GEL/2017/00689	BH 1	22.00-22.45	CS	42	21	21		6	32	62		

DATE : 02/10/2017

TESTED BY : RU

CHECKED BY : DR

CERTIFIED BY : WDBC

ORIGINAL

5497

NATIONAL BUILDING RESEARCH ORGANISATION

GEOTECHNICAL ENGINEERING DIVISION

PARTICLE SIZE DISTRIBUTION CURVE - Soil Investigation for two storied Pavilion Building at Cooray Park, Wellawattha

Job Ref.

Client

30/257

Colo
Muni
Cou

Test Method: BS 1377 : 1990 (Part 2) : Clause 09

Cobble	GRAVEL			SAND			SILT	CLAY
	Coarse	Medium	Fine	Coarse	Medium	Fine		

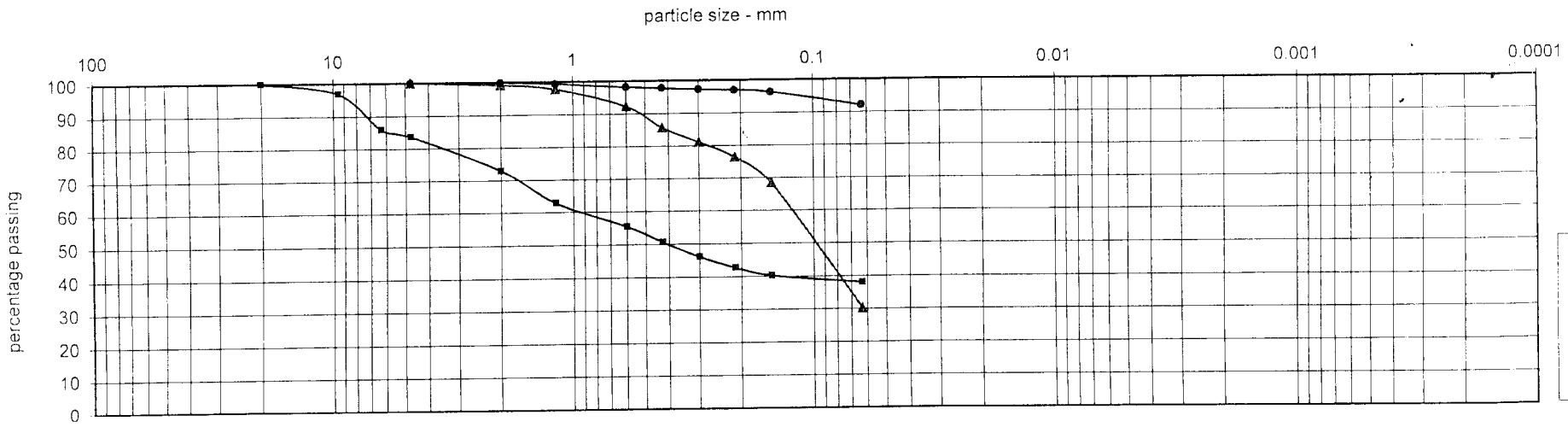

ORIGINAL

Location	Laboratory Sample No.	Borehole No.	Depth (m)	Classification	Liquid Limit	Plastic Limit	Plasticity Index	Cobble (%)	Gravel (%)	Sand (%)	Silt & Clay (%)	Clay (%)	Remarks
	GEL/2017/00690	BH 2	3.00-3.45	MHO	56	32	24		27	35	38		
	GEL/2017/00693	BH 2	7.0[illegible]5	SC	59	27	32		1	69	30		
	GEL/2017/00694	BH 2	21.00-21.45	CV					0	8	92		

DATE: 02/10/2017 TESTED BY: BU[illegible] CHECKED BY: DR[illegible] Job Ref. 30/25719

NATIONAL BUILDING RESEARCH ORGANISATION

GEOTECHNICAL ENGINEERING DIVISION

PARTICLE SIZE DISTRIBUTION CURVE - Soil Investigation for two storied Pavilion Building at Cooray Park, Wellawattha

Job Ref. 30/25/16 A

Client: Colombo Municipal Council

Test Method : BS 1377 : 1990 (Part 2) : Clause 09

Cobble	GRAVEL			SAND			SILT	CLAY
	Coarse	Medium	Fine	Coarse	Medium	Fine		

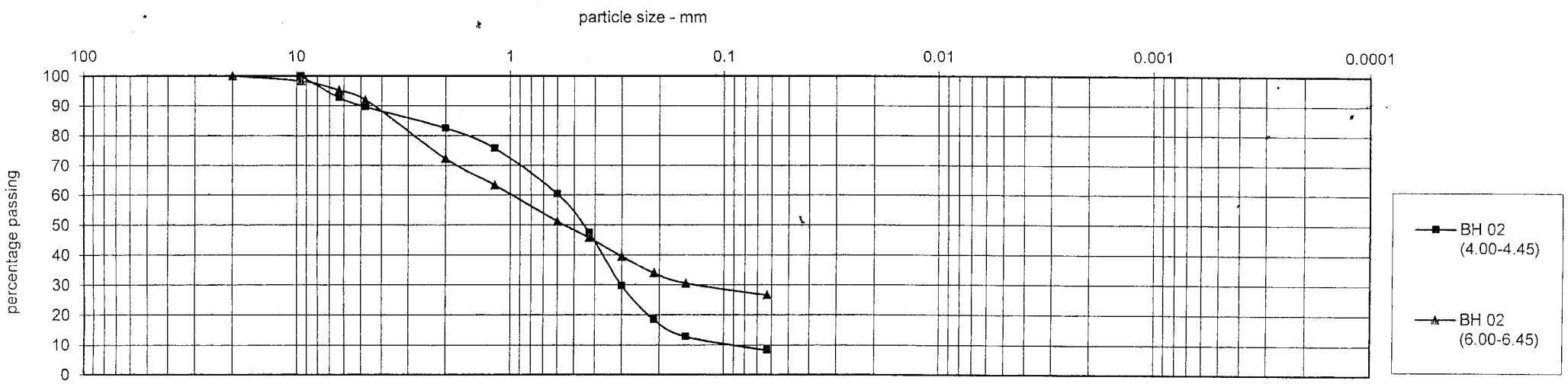

Laboratory	Laboratory Sample No	Borehole No	Depth (m)	Classification	Liquid Limits	Plastic Limits	Plasticity Index	(1) (%)	(2) (%)	(3) (%)	(4) (%)	Remarks
Cooray Park, Wellawatta	GEL/2017/00691	BH 2	4.00-4.45	Pt				17	75	8		(1) Percentage of organic matter greater than 4.75 mm
	GEL/2017/00692	BH 2	6.00-6.45	Pt				28	45	27		(2) Percentage of organic matter greater than 0.075 mm
												(3) Clay & organic matter passing through 0.075 mm
												(4) Clay content

DATE : 02/10/2017 TESTED BY : RU CHECKED BY : DR CERTIFIED BY: WDBC

ORIGINAL

GEOTCHNICAL ENGINEERING DIVISION

NATIONAL BUILDING RESEARCH ORGANISATION

CONSOLIDATION TEST (Log Pressure / Void Ratio Curve)

Project	SOIL INVESTIGATION FOR PROPOSED SIX STORIED PAVILION BUILDING AT COORAY PARK, WELLAWATTA				
Client	COLOMBO MUNICIPAL COUNCIL		Project No.	30/25719 A	
Location	Cooray Park, Wellawatta		Laboratory Sample No:	GEL/2017/00643	
Depth (m)	3.00-3.70	Chainage -	Borehole No.	BH 2	
Soil Description	-	Started Date	16/9/2017	Completed Date	27/9/2017

Test Method : BS 1377 : 1990 (Part 5)

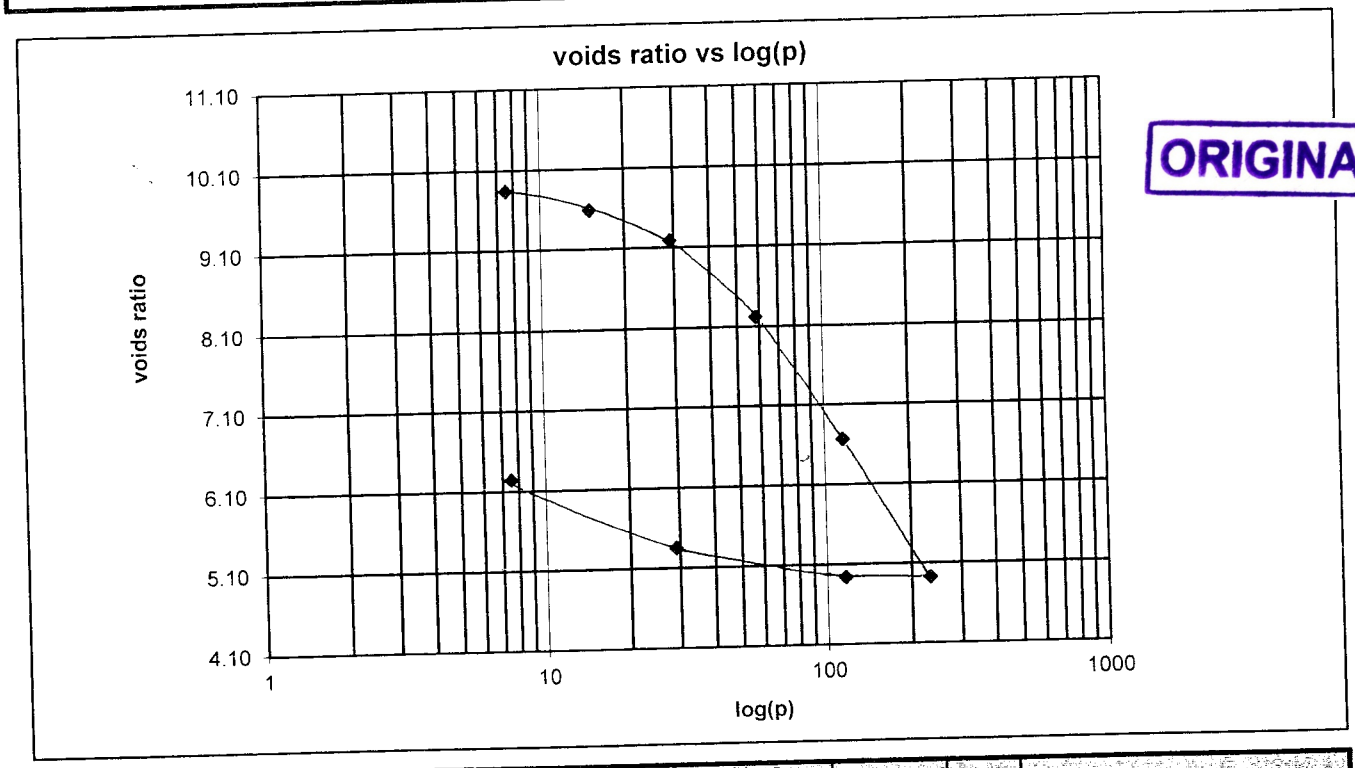

ORIGINAL

SPECIMEN INITIALLY					
Diameter	mm	50.00	Bulk density	g/cm³	1.06
Height Initial	mm	20.00	Moisture content	%	360.2
Void ratio initial	e_o	10.17	Dry density	g/cm³	0.23
Saturation	%	100	Specific gravity	G	2.61
Void ratio final	e_f	6.24	Solid height	mm	1.79
Compression Index	C_c	5.77	Swelling index	C_s	0.14
Pre consolidation pressure			40 kPa		

Remarks:

Pressure (kPa)	Void ratio (e)	Laboratory coefficient of Compressibility M_v (m^2/kN)	Laboratory coefficient of Consolidation C_v (m^2/Yr)
0.0	10.17		
7.5	9.84	0.00393	2.2804
15.0	9.58	0.00313	2.3825
29.0	9.18	0.00268	13.9976
58.0	8.22	0.00328	2.4133
116.0	6.66	0.00290	1.2232
232.0	4.92	0.00196	0.4561
116.0	4.94	0.00002	
29.0	5.35	0.00079	
7.5	6.24	0.00655	

Date	Tested by	Checked by	Certified by	Remarks
28/9/2017	TAC	DG	CB	

ORIGINAL

SECTION 7

FORM OF BID

ORIGINAL

FORM OF BID

Name of Contract: **Proposed Pavilion at Cooray Play Ground Wellawatta,Colombo06**

To: Municipal Commissioner:

1. Having examined the Standard Bidding Document - Procurement of Works – Major Contracts [ICTAD/SBD/02 - Second Edition, January 2007], Specifications, Drawings and Bills of Quantities and Addenda for the execution of the above-named Works, we the undersigned, offer to execute and complete such Works and remedy any defect therein in conformity with the aforesaid Conditions of Contract, Specifications, Drawings, Bills of Quantities and addenda for the sum of Sri Lankan Rupees .....
.....
..... (LKR .....) or such other sums as may be ascertained in accordance with the said Conditions.

2. I/We acknowledge that the Contract Data forms part of our Bid.

3. I/We undertake, if our Bid is accepted, to commence the Works as soon as is reasonably possible after the receipt of the Engineer's notice to commence, and to complete the whole of the Works comprised in the Contract within the time stated in the Contract Data.

4. I/We agree to abide by this Bid till **22.06.2022** and it shall remain binding upon us and may be accepted at any time before that date.

5. Unless and until a formal Agreement is prepared and executed this Bid, together with your written acceptance thereof, shall constitute a binding Contract between us.

6. I/We understand that you are not bound to accept the lowest or any bid you may receive.

7. I/We certify/confirm that we comply with the eligibility requirements as per ITB Clause 3 of the bidding documents.

Dated this ..... day of ..... 20.....

Signature ..... in the capacity of .....

duly authorized to sign bids for and on behalf of .....

[in block capitals or typed]

Address: .....

Witness Name: ---------- Address:----------

NIC No. ----------

ORIGINAL

Section-8

BILLS OF QUANTITIES

1. Include appropriate Preliminary Bill items as Bill No. 1
2. VAT component shall be included in BOQ and VAT component shall not be carried to Form Of Bid.
3. Any discount offered will not be considered for Provisional Sum Items.

ORIGINAL

151

COLOMBO MUNICIPAL COUNCIL

MUNICIPAL ENIGNEERS' DEPARTMENT

Issued to: .....

Form fee: ..... Form fee receipt No .....

BILL OF QUANTITIES AND SCHEDULE OF RATES

Description of work : Proposed Pavilion at Coorey Play ground. Wellawaththe Colombo 06.

Drawing No : .....

Bill NO 1 – Preliminaries

Note :

The pricing of this bill is optional. But, omission to price this bill will not exempt the bidder from complying with the Conditions of Contract and the cost of executing these items shall be deemed covered by the other rates and prices in the Bill of Quantities. This will be paid pro-rata according to the work done on each of the bills tendered for.

This bill provides for the typical general items complementary to the works which are required to be provided by the Contractor in compliance with the General Conditions of Contract (General obligations).

The Contractor should price item 15 for the minimum personnel stipulated in the Bid document for providing Construction Management Services above the supervisory grade.

The Bidder in pricing the provisional item 15 shall furnish the names and qualifications of such personnel and indicate whether they are in house or on contract, and if on contract accompany a firm commitment from the individual or the firm. Payment against provisional items will be certified by the Engineer on compliance by the Contractor in the manner listed in Clause 63 of Conditions of Contract.

ORIGINAL

Proposed Pavilion at Cooray Play Ground Wellawatta,Colombo06
Contract Number: ME/SR/BN/295/2021

Bill Number 01 - Preliminaries

Serial No	Description	Unit	Amount in Rs.
1	Provincial sum for providing a Performance security.	**Provisional sum**	**297,000.00**
2	Provincial sum for providing a Advance Payment security.	**Provisional sum**	**1,188,000.00**
3	Provincial sum for insurance of works, Machinery & Equipment, Plant, Material, third party persons & property and Employer's personnel & property at site as per the Contract.	**Provisional sum**	**432,000.00**
4	Provincial sum for insurance against accidents and injury to Contract's personnel as per the contract.	**Provisional sum**	**432,000.00**
	Contract's Facilities		
5	Allow lump sum for constructing, maintaining, dismantling and removal on completion of the Works, a temporary site office of adequate size including staff rest room and toilets and other facilities for the Contractor's site management staff in accordance with the plans prepared by the contractor and concurred by the Engineer.	Item	
6	Allow lump sum for constructing, maintaining, dismantling and removal on completion of the Works, building to be used as workshops and stores for perishable materials. Buildings shall be constructed in accordance with the drawings prepared by the contractor and concurred by the Engineer. The Lump sum shall also include for altering, modifying, or dismantling and re-erecting within the site all temporary buildings/structures if required.	Item	
7	Allow lump sum for constructing, maintaining, dismantling and removal on completion of the Works, temporary building in accordance with the plans prepared by the contractor and concurred by the Engineer to accommodate the following: 1. Worker's rest room, canteen facilities, kitchen 2. Toilet and wash areas. 3. Sick/First - Aid room 4. Accommodation for contractor's staff and workmen including sanitary facilities on site of applicable. facilities to workman shall conform to the latest public health and industrial regulations.	Item	
8	Allow lump sum for providing accommodation including sanitary facilities and transport for contractor's staff and workmen off site.	Item	

ORIGINAL

Serial No	Description	Unit	Amount in Rs.
9	Allow lump sum for providing telephone and facsimile facilities, electricity and water servicers for contractor's site office for their use in connecting with the works.	Item	
10	Allow lump sum for maintenance, rental, consumption chargers etc. For telephone and facsimile facilities, electricity and water servicers for contractor's site office for their use in connecting with the works.	Item	
11	Allow lump sum for contractor's transport facilities at site.	Item	
12	Allow lump sum for employing a licensed land surveyor to define the building site work etc., check levels and carry out such other surveys as may be necessary to establish accurately the placing of forms and pouring of concrete and all other setting out in both vertical and horizontal plane.	Item	
13	Allow lump sum for setting out of works in accordance with drawings and other written information given by the Engineer.	Item	
	Quality, Standards and progress		
14	Allow lump sum for provision of provision of progress reports including photographic records and other schedules included in the ICTAD publication Guidelines for effective construction management. (ICTAD/CM/01), relevant to contract administration as directed by Engineer	Item	
15	Allow lump sum for all cost in connection with preparing samples for testing, making arrangement for testing of Materials, goods etc, as stipulated in the specification, obtaining test reports and submitting the same to the Engineer.	Item	
16	Allow lump sum for provision of shop drawings, bar schedules etc for Engineer's approval.	Item	
17	Allow lump sum for provision of 2 sets of (hard copies and soft copies) as-built drawings of all services, for Engineer's approval.	Item	
	Health, Safety and Environment		
18	Allow lump sum for following services throughout the period of construction for the Engineer's Office, contractor's site office and worker's rest room and other facilities; a. Employing workmen to clean and maintain all areas to be in good hygienic conditions including toilets, wash areas, kitchen etc.	Item	

ORIGINAL

Serial No	Description	Unit	Amount in Rs.
	b. Supplying adequate drinking water, water for washing purposes, soap, detergent, etc. throughout the period of construction.		
19	Allow lump sum for providing all necessary safety safety measures to workmen at site conforming to the latest industrial safety regulations and as directed by the Engineer.	Item	
20	Allow lump sum for making adequate provisions against air and noise pollution of surrounding areas. Hoarding and dust screens shall be provided to control dust escaping to surrounding areas.	Item	
21	Allow lump sum for maintaining the site clean and orderly manner at all times and during the entire contract period.	Item	
22	Allow lump sum for demobilization, removal of all rubbish & debris and clearing up site on completion, leaving all in good order and handing over.	Item	
23	Allow lump sum for employing and adequate number of security personnel and security systems on full time basis throughout the period of construction, and providing for necessary security lighting and warning system.	Item	
24	Allow lump sum for providing and maintaining necessary fencing, hoarding and gates for safeguarding the works, materials and plant, as directed by the Engineer	Item	
25	Allow lump sum for protection of public and private servicers at site. The Contractor shall take due care to protect, water supply and drainage systems, telephone and over head/ buried electrical cable etc. Whose locations are identified and and make available to bidders at the time of bidding, unless earmarked for demolition, during the execution of the works. The contractor is to make good any damage due to any cause within his control at his own expenses or pay any cost and charges in connection therewith.	Item	
26	Allow lump sum for supply of water for the works and paying all chargers and other expenses in connection with the supply from water mains or any other alternative method of water mains or any other alternative method of water supply, storage and reticulation.	Item	
27	Allow lump sum for supplying temporary electricity for the Works including connection, distribution system for the works, internal arrangements and all payments to the authorities for consumption.	Item	

ORIGINAL

Serial No	Description	Unit	Amount in Rs.
28	Allow lump sum for providing hoisting equipment and other plants for the use of the works on site (dry Hire)		
29	Allow lump sum for providing small machinery and equipment for the use of the works at site	Item	
30	Allow lump sum for erecting and maintaining scaffolding and / or self climbing platform. Such scaffolding etc. shall be removed on completion and all works disturbed shall be made good.	Item	
31	Allow lump sum for stamp duty in accordance with the prevailing regulations of the Government	Item	
32	Allow lump sum for providing and maintaining a name board to the specification and/ as direscted by the engineer	Item	
33	Allow lump sum for excavating for trial pits/ trial trenchers as specified or as directed by the Engineer as for locating servicers etc. and reinstating the ground and making good disturbed work to the satisfaction of the Engineer.	Item	
	Total carried over to summary		

ORIGINAL

149

BILL OF QUANTITIES FOR PROPOSED PAVILION AT COOREY PLAYGROUND, BILL NO 02

NO	DESCRIPTION	UNIT	QTY	RATE Rs.	AMOUNT Rs.
	Notes				
	The attention of the Bidder is drawn to the use of Bill of Quantities, Drawings, Conditions of Contract, CIDA Specifications and any other particulars related to this Bid. It is the Bidder's responsibility to see that his price includes for complying with all the requirements of the conditions of contract and other documents whether specifically referred to in this Bill of Quantities or not.	Note			
	The Bidder is advised to visit the site of the proposed work, as it is his responsibility to ascertain the Conditions, governing access to the site, the external working space, storage area, access to the site, availability of power and water etc. or any other conditions of relevance.	Note			
	A list of typical general items are given below. However, the bidder is requested to price only those items that may affect this contract.	Note			
	Any other preliminary items not listed below but deemed to be included in the Bid rates, as no extras would be made.	Note			
	The contractor shall be responsible for any loss or damage to the works, existing structures, adjoining or adjacent structures and unfixed materials during the term of the contract.	Note			
	All temporary works, shall be dismantled and cleared away from the site on completion of the work.	Note			

ORIGINAL

148

NO	DESCRIPTION	UNIT	QTY	RATE Rs.	AMOUNT Rs.
	Plant, Material & Work Practices				
	No work in any trade shall be carried out in such a manner as to cause any nuisance to adjacent owners or the public.	Note			
	Mechanical plant and equipment which emits excessive vibrations, noise, water, smoke, fumes, obnoxious liquids, gases etc., **will not be allowed** to be used on the site, Hydraulic rotery drilling machines with necessery supportive machineries shall be used and prior approval shall be taken for method statement from the Engineer.	Note			
	The Engineer has the final decision as and when he deems it necessary for the Contractor to take precautions, maintain or repair such plant and equipment or order their removal from the site.	Note			
	Site shall be maintained in a clean and orderly fashion at all times and during the entire contract period. Materials, etc., shall be kept neatly stacked on the site with all access - ways kept clear. All dust, debris and rubbish etc., arising out of his own work shall be continuously cleared and removed from the site. The burying of rubbish and debris on site will not be allowed.	Note			
	The installation of piles shall be in conformity with the specification with respect to vertical and horizontal alignment. Any deviation greater than the permissible tolerance , the cost of additional structural work arising from such misalignment shall be borne by the piling contractor.	Note			
	In case of any failure of the piles such piles to be rectified by installation of new pile and cost of such piles to be borne by the piling contractor.	Note			

ORIGINAL

147

NO	DESCRIPTION	UNIT	QTY	RATE Rs.	AMOUNT Rs.
	Adequate provisions to be allowed to reduce the amount of vibration, dust, pollution and noise from the site and shall be the contractor's responsibility for any complaints, damages or claims in connection with the works. The contractor shall measure and maintain noise and vibration levels acceptable to the environmental and other authorities and shall maintain a monitoring procedures acceptable to the Engineer including necessary changes to the method of working time to time to be within the acceptable noise and vibration level.	Note			
	The Contractor shall provide necessary lighting, watchmen, and other suitable security measures during construction until handing over.	Note			
	The contractor shall give notice to authorities etc., obtaining permits and the payment of fees for such permits in compliance with the requirement of the by-laws and regulations lawfully imposed by the Government or Semi Governmental or other local authorities.	Note			
	The Contractor shall prepare and submit a detailed programme of work in the form of a Network Analysis. This shall be known as the Bid Network. The Network shall be defined and developed as a Critical Path Network and shall include all activities. The activities shall include the delivery, construction, installation, testing and commissioning of components and all items associated with setting up on site shall be indicated.	Note			

ORIGINAL

148

NO	DESCRIPTION	UNIT	QTY	RATE Rs.	AMOUNT Rs.
	Care shall be taken to ensure that the rights of all adjoining and adjacent owners, tenants and the public are fully respected. Immediately upon receipt of any form of complaint from adjoining property, owners or any Authorities, the Contractor shall notify the Employer and the Engineer and the nature of such complaint and the corrective measures he intends to employ. The Contractor will be held solely responsible for any damage caused to the adjoining and adjacent properties through the carrying out for the works under this contract and shall make good and compensate such damage to the satisfaction of the Engineer.	Note			
	The Contractor shall maintain the quality and standards during construction including supplying specimen, all necessary tests and samples of materials for approval and for testing with out any additional cost.	Note			
	The Contractor shall maintain safety procedures and provide and maintain first aid facilities at site.	Note			

ORIGINAL

745

NO	DESCRIPTION	UNIT	QTY	RATE Rs.	AMOUNT Rs.
	The Contractor shall protect, uphold and maintain all water and drain pipes, ducts, sewers, service mains, overhead cables, etc., unless earmarked for demolition, during the execution of the works. The Contractor is to make good any damage due to any cause within his control at his own expenses or pay any cost and charges in connection therewith. In cases where the services are to be temporarily terminated or diverted the Contractor is to give the necessary notice to the appropriate Authority with the approval of the Employer/Engineer and arrange for the work to be carried out and pay all costs and charges in connection therewith. Delays to the Contract completion time caused by such damage will not be entertained.	Note			
	The Contractor shall protect and maintain the approaches to the site, clear of mud and debris with connected services. The contractor is to make good any damage attributable to the works at his own expense or pay all costs, charges in connection therewith.	Note			
	Cost of Contract stamps, CIG levy, to be borne by the Contractor as applicable .	Note			
	Normal working Hours should be the laws of the democratic socialist requblic of sri lanka.	Note			
	Plant and Machinery-				
	Contractor shall be aware about the air spaces related to adjacent land and any additional cost due to limitations shall be bone by the Contractor.	Note			

ORIGINAL

144

NO	DESCRIPTION	UNIT	QTY	RATE Rs.	AMOUNT Rs.
	Mobilization and demobilization of plant and equipment for piling included in the relevant trades.	Note			
D	**PILING WORK (BORED CAST IN SITU PILES)**				
	The Bidder is requested to refer General Notes, Pricing Preambles, drawings, Specifications, CIDA guidelines Conditions of Bid, Conditions of Contract and all other relevant documents prior to pricing the items in this Bid.	Note			
	The piling contractor shall carry out piling work considering the close proximity of the adjacent buildings and proposed to carry out the installation of piling using the appropriate equipment and piling machines approved by the Engineer.	Note			
	The Bidders are specially requested to refer the soil investigation report thoroughly prior to pricing this section. Any discrepancies and or any suggestion to be forwarded with the Bid or prior to that to the Engineer for clarification.	Note			
	The Bidder is advised to take special precautions during the entire construction period for the monitoring vibration and noise at regular intervals, submission and carrying out of testing for effects to existing adjoining buildings and other properties due to erection of the works for a full scale measurement exercise including taking levels of streets, adjacent buildings, etc.	Note			

ORIGINAL

143

NO	DESCRIPTION	UNIT	QTY	RATE Rs.	AMOUNT Rs.
	The Bidder shall make all arrangement for clearance from statutory divisions, Road Development Authority, Colombo Municipal Council, Sri Lanka Police etc., and other related statutory bodies as no extra payment for any such delay in obtaining necessary approval.	Note			
	No extra payment will be made for any delay caused by security or any other arrangement of the statutory- divisions, Road Development Authority, Colombo Municipal Council, Sri Lanka Police etc.,	Note			
	The Bidder is advised to visit the site of the proposed work, as it is his responsibility to ascertain the conditions governing, actual quantum of work involved, access to the site, the external working space, storage area etc.	Note			
	The onus of responsibility will be on the contractor to ensure that the actual rock level with anticipated bearing capacity, cut off levels are established at the time of piling, so that the final payments may be computed accordingly.	Note			
	The lengths of all piles has been calculated from cut off levels to end of piles for the purpose of working out the quantities in this Bill of Quantities but payments shall be to the actual cut off levels of the piles. Rock level is at app. **27m - 28 m** level from existing ground level.	Note			

ORIGINAL

148

NO	DESCRIPTION	UNIT	QTY	RATE Rs.	AMOUNT Rs.
	The Contractor shall insure against damage to adjoining properties, adjacent structures, any existing over head and/or under ground services that may cause damages as a result of this piling work not less than their prevailing market values of the relevant properties. (measured under preliminaries)	Note			
	Rates shall include for mobilization, demobilization and maintenance of plants and equipment unless measured separately.	Note			
	If any damage is caused to any pile or piles due to the installation of adjacent piles or due to any other work being carried out by the Contractor the contractor shall take such remedial measures as may be ordered by the Engineer including the installation of additional piles and the cost of such measures to be borne entirely by the contractor.	Note			
	The rates shall include for temporary back filling (filled with soil) and steel casing (minimum 6m) and high strength concrete grouting at cut-off level as per specification and drawings.	Note			
	The rate shall include for removal of all spoils, soil, including removal of any cut lengths broken concrete of Laitance and used fluid etc., away from the site.	Note			
	Concreting of piling shall be terminated to a height as specified above the cut off level and then cut back to the specified cut off level. Piling length will be measured between the end of pile and up to the cut off level for payments.	Note			

ORIGINAL

141

NO	DESCRIPTION	UNIT	QTY	RATE Rs.	AMOUNT Rs.
	Setting out of piles and dimensions of piles to be approved by the Engineer on submission of a survey plan certified by a licensed Surveyor in triplicate. Setting out piles and dimensions of piles to be approved by the Engineer prior to commencement of work.	Note			
	Socketing to rock will be as per detail drawing.	Note			
	The Bidders shall submit the detail of the method of piling work together with necessary shop drawing, equipment to be used, duration, durability and method of erection etc., The method of piling should take into consideration the surrounding buildings and other services etc., in the vicinity, suitable to the type of soil strata method of removal of temporary work and construction chosen to adopt the proposal given herein.	Note			
	Payments for piling shall be valued as follows (a) Piling rate to be applicable from bottom level of pile to specified cut off level for payment. (b) Empty boring has been measured separately from existing ground level to top of hard rock including drilling through any weathered rock /soft rock. (c) No payment will be made for any length of pile above specified cut off level. (d) Boring through the hard rock has been measured separately. Each pile and to be casted into the base rock for a minimum length of 1500 mm boring through the fresh bed rock unless other wise specified. (e) Payments for piling shall be on a Measure and Pay Basis.	Note			

ORIGINAL

140

NO	DESCRIPTION	UNIT	QTY	RATE Rs.	AMOUNT Rs.
	The Bidders are requested to submit to the Engineer for approval, full details of piles offered on how the calculation and checking of the load bearing capacity and settlement of the piles that will be carried out and the tests proposed to be done at the site.	Note			
	No earth work supports have been measured separately for boring the piling. Should the earth work supporting system and dewatering as required and the contractor shall include this in his pricing. No temporary casing measured separately and rates shall include for providing temporary casing as required.	Note			
	The contractor shall submit the details of the temporary works to the Engineer for approval prior to commencement of such work.	Note			
	Rate for bored piles include excavation, concrete and high strength grout at cut off level etc.	Note			
	Rate shall include for remove surplus excavated materials and dispose it off the site.	Note			
	Each pile should be concreted an adequate length above the pile cut-off level to allow for slump and weak concrete with laitance at the top so that at cut- off point sound concrete of the specified strength is obtained.	Note			
	Filling of Cavities if any, shall not be considered as a variation and shall not be paid separately. It is the contractors responsibility to fill the cavities as per the requirements in the contract Document and or to the satisfaction of the Engineer.	Note			

ORIGINAL

NO	DESCRIPTION	UNIT	QTY	RATE Rs.	AMOUNT Rs.
	Having had pile or piles liable for rejection, further testing of piles by static load test method or dynamic load testing will be required for each rejected pile. Extra piles to be tested will be nominated at the discretion of the Engineer. All costs associated with extra testing requirements, time extension claims and other consequential claims put forwarded by Main Contractor shall be borned by the Piling Contractor.	Note			
	Pile caps and ground beams have been measured under "Concreter".	Note			
	Main Piles				
	Mobilization				
	Allow for mobilization plants and equipment initially and and demobilization of plants and equipment on completion of piling work	Item			
	Empty Boring				
	Empty boring for piles including boring through any material including weathered rock, soft rock, fractured rock in an approved method including earth support in an approved method, removal of all soil from the existing ground level to top of hard base rock and dispose them away from the site in the following.				
1	600mm dia piles 26 nr app. 28.0 m depth	m	728.00		
2	750mm dia piles 05 nr app. 28.0 m depth	m	140.00		

ORIGINAL

NO	DESCRIPTION	UNIT	QTY	RATE Rs.	AMOUNT Rs.
	Boring in hard base Rock				
	Allow for boring in hard base fresh rock for socketing to a 1500 mm depth as specified including removal of all spoils away from the site in an approved method. If fractures noticed the depth should be increased as per the Engineer's instruction. Rock quality to be determined by the Engineer.				
3	Boring through hard base rock 600mm dia. piles -26nr	m	39.00		
4	Boring through hard base rock 750mm dia. piles -5nr	m	7.50		
	Concreting				
	All the piles should be socketed in to the hard rock. The minimum depth in to the hard rock is minimum 1.5 m. If fractures noticed the depth should be increased as per Engineer's instructions.	Note			
	The cement use shall be PPC cement complying BS 8500. The minimum cement content shall be not less than 400Kg/m^3 for concreting under water.	Note			
	Cut off level of piles to be established as per the details indicated.	Note			
	Any under cast piles to be built up in case, found after expose the piles without any additional cost to the Employer.	Note			
	Rate shall include for installing and retrieving temporary steel casing if necessary.(Temporary steel casing of approved quality shall be used to maintain the stability of pile excavation which might otherwise collapse).	Note			

ORIGINAL

137

NO	DESCRIPTION	UNIT	QTY	RATE Rs.	AMOUNT Rs.
	The pilling sequence should be prepared by the contractor for the prior approval of the Engineer. The minimum distance to be maintained with raw piles and the equipment available.	Note			
	Average pile depth to be taken as approximately 30 m (app 28m + 1.50 m) including socketing to cut off levels for the purpose of calculation of prices. Rate shall include for dewatering, if necessary. Actual pile length may vary on actual construction and payment will be made on linear meter rate from bottom level to cut off level for each pile as work done at site. Empty boring has been measured separately.	Note			
	The Piling contractor shall execute pile hacking, pile testing during the excavation.	Note			
	Reinforced concrete in **grade 30** with necessary casing system,				
5	600mm dia piles 26 nr	m	728.00		
6	750mm dia piles 06 nr	m	140.00		

ORIGINAL

NO	DESCRIPTION	UNIT	QTY	RATE Rs.	AMOUNT Rs.
	Reinforcement to piles High yield steel bar reinforcement (The characteristic strength of reinforcements shall be not less than 460N/mm^2. Concrete cover to all reinforcements, welded joints or welding procedure shall be carried out in accordance with specifications and as shown in the detail drawing and including stirrups including welding, bends, hooks, distance blocks, ordinary spacers, concrete blocks, laps, etc. in the following.				
7	600mm dia piles 26 nr	kg	24,300.00		
8	750mm dia piles 5 nr	kg	6,270.00		
	Pile Hacking Any over cast piles to be hacked to cut off levels by the piling contractor with out any additional cost to the Employer.	Note			
	Allow for pile hacking at cut off levels and removal of all debris away from the site. Rate for pile hacking shall include for necessary excavation and earth work supports and dewatering as necessary. Rates shall include for removal of all debris, back filling, leveling and making good the effected area to the following.				
9	600mm dia piles 26 nr	nr	26.00		
10	750mm dia piles 60 nr	nr	5.00		

ORIGINAL

135

NO	DESCRIPTION	UNIT	QTY	RATE Rs.	AMOUNT Rs.
	Pile Tests				
	Allow testing cast insitu piles and the number of piles to be tested as specified in specifications of pile works. The Bidder shall submit the method of test and all technical information along with the tender for the Engineer's approval. (including equipment test certificates etc.,)	Note			
	Pile Dynamic Analyzer -PDA				
	Allow for Pile Dynamic Analyzer **-PDA** test to the specified load test including preparation of pile top for testing by a specialist authority and submission of test report to the following.	Note			
11	600 mm dia Piles to specified load	nr	2.00		
12	750 mm dia Piles to specified load	nr	1.00		
	Pile Integrity Test (PIT)				
	Allow for pile integrity tests - **PIT** for all number of piles. The contractor shall submit the method and details of the test for following.	Note			
13	600 mm dia Piles	nr	26.00		
14	750 mm dia Piles	nr	5.00		
	TOTAL FOR PILING WORK CARRIED TO BID SUMMARY				

ORIGINAL

134

BILL OF QUANTITIES FOR PROPOSED PAVILION AT COOREY PLAYGROUND, WELLAWATTA.

Item	Description	Qty.	Unit	Rate Rs.	Amount Rs.
	BILL NO: C **DEMOLITIONS** **Note:** **1. Prior to do pricing the Contractor is adviced to read preamble notes and do a detail inspection of the site related to all items mention under this bill .** **1. Rates for Demolition shall include demolishing, dismantling and removing etc. with the minimum damage to the material in the process of dismantling, temporary supporting and protecting existing work and adjacent properties against damage, dust and weather and stacking and transport to specified location all serviceable materials as directed and disposal of debris from site including spraying water periodically to reduce the amount of dust.** **2. Precautions should be taken during piling up of debris so as not to disrupt existing drainage pathways , manholes, pavements walkways etc** **3. Rate shall include for Disconnection or plugging water , sewer connection**				
02-C-01	Allow for demolishing existing pavilion building including grubbing up foundation and carting away debris (Approximate floor area 285m^2)		Item		
2-C-04	Purchasing of reusable items by the contractor.(Contractor has to offer a price for this marked as negative) .		Item		
	Total carried over to summary				-

ORIGINAL

133

Item	Description	Qty.	Unit	Rate Rs.	Amount Rs.
	BILL NO. D **EXCAVATION AND EARTH WORK** **Note:** **1. Unless otherwise measured separately rates shall include for :** **· Disposal of surplus earth away from the site** **· Compact bottom of excavations** **· Earth work supports** **· Working space** **· Dewatering of ground and other water** **· Dewatering of rain water and collecting water** **· Stacking of excavated earth for removal** **· Handling and re-handling of earth** **2. Rate for Hard Earth Filling shall include for:** **· Filling in layers, (not more than 1'0") well ramming and consolidating.** **· The earth shall be free of vegetation, roots, boulders easily decomposable materials, chemicals, industrial waste, plastic etc.** **·The maximum size of particle shall not exceed 75mm.** **·The earth shall be well graded and contain silt and clay (fines) not more than 30%.**				
D.01	Allow for site preparation, Clearing site vegetation, removing debris, top soil to a depth not exceeding 150mm and removing all debris away from site.	730.00	m^2		
D.02	Excavating trenches for wall & stair case foundations, depth n.e 1.0m	20.00	m^3		
D.03	Approved Earth supplying ,spreading , leveling watering and compaction manually using standard cast iron stamper or equivalent and filling in 150 mm thick layers .	280.00	m^3		

ORIGINAL

132

Item	Description	Qty.	Unit	Rate Rs.	Amount Rs.
D.04	Approved Earth supplying ,spreading , leveling watering and compaction and filling in 150 mm thick layers using machine Rammer or approved equalent.Rate shall include for forming ground tires by cutting from compacted soil fill. Concreeting measured seperately.	90.00	m³		
	Total carried over to summary				
	BILL NO.F **CONCRETE WORK** **F1 - INSITU CONCRETE** **Note:** **Rates shall be included for** **1. Mixing, handling, hoisting and depositing into position.** **2. Packing around reinforcement and vibrating.** **3. Continuous curing of exposed reinforced concrete slabs with ponding water and covering with polythene sheets. In case of columns, , beams, staircase, Plinth beam & Ground beam etc , covering the exposed concrete surface with gunnies and spraying water and keeping wet all concrete elements for a period of 14 days .** **4. Ready mixed concrete should include pumping charges.** **Insitu concrete grade 15 (maximum aggregate size 25mm), approved thickness in blinding layer, poured in to ground for the following item**				
F1.01	Under staircase footing.	4.50	m²		
F1.02	Under wall foundations	28.00	m²		
F1.03	In floor thikness n.e. 150mm,	39.00	m³		
F1.04	Ground floor ramp for parking area	5.40	m³		
F1.05	Ground floor tires.	11.00	m³		
	RCC concrete grade 25 (maximum aggregate size 25mm) and column, sectional area not exceeding 0.1m² for the following items				

ORIGINAL

131

Item	Description	Qty.	Unit	Rate Rs.	Amount Rs.
F1.06	Staircase footing.	1.12	m^3		
F1.07	Column, up to 1st floor level.	31.25	m^3		
F1.08	Column, up to 2nd floor level.	23.50	m^3		
F1.09	Column, up to 3rd floor level.	19.25	m^3		
F1.10	Column, up to 4 th floor level.	14.00	m^3		
F1.11	Column, up to roof beam level.	23.50	m^3		
F1.12	Stair case sharft up to finish floor level	3.00	m^3		
F1.13	Stair case F.F.L to 1st floor level	14.00	m^3		
F1.14	Stair case 1st floor level to 2nd floor level	5.00	m^3		
F1.15	Stair case 2nd floor level to 3rd floor level.	5.00	m^3		
F1.16	Stair case 3rd floor level to 4th floor level.	5.00	m^3		
F1.17	Landing beam Ground floor	1.00	m^3		
F1.18	Landing beam 1st floor	1.00	m^3		
F1.19	Landing beam 2nd floor	0.55	m^3		
F1.20	Landing beam 3rd floor	0.55	m^3		
	Ready mix concrete of grade 25(25 N/mm2) confirming to SLS 1144-1997 for the following items.				
F1.21	175 mm thick First floor slab	113.00	m^3		
F1.22	1st floor beam	51.00	m^3		
F1.23	2nd floor Tiers	120.00	m^3		
F1.24	175 mm thick 2nd floor slab	40.00	m^3		
F1.25	2nd floor beam	46.50	m^3		
F1.26	175 mm thick 3rd floor slab	113.00	m^3		
F1.27	3rd floor beam	50.00	m^3		
F1.28	150 mm thick 4th floor slab	15.25	m^3		
F1.29	4th floor tie beam	18.00	m^3		
F1.30	Roof beam	15.00	m^3		

ORIGINAL

130

Item	Description	Qty.	Unit	Rate Rs.	Amount Rs.
	Ready mix concrete of grade 30(30 N/mm2) confirming to SLS 1144-1997 for the following items.				
F1.31	Ground beam.	97.00	m³		
F1.32	Pile cap	68.00	m³		
	Cement concrete grade 20 for the following items.				
F1.33	Lintols(150mmX225mm) in ground floor level	3.75	m³		
F1.34	Lintols(150mmX225mm) in 1st floor level	1.50	m³		
F1.35	Lintols(150mmX225mm) in 2nd floor level	1.00	m³		
F1.36	Lintols(150mmX225mm) in 3rd floor level	2.25	m³		
F1.37	Lintols(150mmX225mm) in 4th floor level	0.50	m³		
F1.38	In work top (Ground floor)	0.30	m³		
F1.39	In bench (Ground floor)	1.50	m³		
	F2 - FORM WORK **Note:** **Quality of the form work should be approved by the engineer prior to erection.** **A. Rates shall include for** **· All necessary boarding, supports, applications of mould oil as necessary, erecting, framing, cutting angles, cleaning, wetting and treatment before placing concrete and striking or removal etc.** **· Formwork to be measured net contact surface between concrete & formwork.** **· Formwork to beams, columns, and casings deemed to include ends.**				

ORIGINAL

129

Item	Description	Qty.	Unit	Rate Rs.	Amount Rs.
	B. The contractor shall provide sufficient formwork and moulds to ensure the adequate progress of the work and the Engineer may direct the contractor to provide at Contractor's expense such additional formwork and moulds as they may deem necessary if in his opinion the proper progress of the work is retarded by their absence. **C. Rate to be included erecting and dismantling of scaffolding and formwork.** **D. Formwork for footing, column, beams, lintel, walls, and slabs are of 15mm thick ply-boards.** Formwork shall be properly designed formwork as described in specification and it should be sufficiently strong, rigid and should have an even smooth surface and grout tight and should provide a basic finish.				
F2.01	Stair case footings.	11.00	m²		
F2.02	Ground beam.	48.50	m²		
F2.03	Pile cap	130.00	m²		
F2.04	Ground floor tiers.	20.00	m²		
F2.05	Second floor tiers	890.00	m²		
F2.06	Stair case ground floor to 1st floor	82.00	m²		
F2.07	Stair case 1st floor to 2nd floor	31.00	m²		
F2.08	Stair case 2nd floor to 3rd floor	31.00	m²		
F2.09	Stair case 3rd floor to 4th floor	31.00	m²		
F2.10	Column, sectional area not exceeding $0.1m^2$ up to 1st floor level.	60.00	m²		
F2.11	Column, sectional are exceeding $0.1m^2$ up to up to 1st floor level.	227.00	m²		
F2.12	Column, sectional area not exceeding $0.1m^2$ up to 2nd floor level.	41.00	m²		
F2.13	Column, sectional are exceeding $0.1m^2$ up to 2nd floor level.	194.00	m²		

ORIGINAL

128

Item	Description	Qty.	Unit	Rate Rs.	Amount Rs.
F2.14	Column, sectional area not exceeding $0.1m^2$ up to 3rd floor level.	23.00	m²		
F2.15	Column, sectional are exceeding $0.1m^2$ up to 3rd floor level.	158.00	m²		
F2.16	Column, sectional area not exceeding $0.1m^2$ up to roof beam level.	43.50	m²		
F2.17	Column, sectional are exceeding $0.1m^2$ up to roof beam level.	324.00	m²		
F2.18	Sides and soffit of 1st floor beams	306.50	m²		
F2.19	Sides and soffit of 2nd floor beams	271.00	m²		
F2.20	Sides and soffit of 3rd floor beams	302.50	m²		
F2.21	Sides and soffit of roof beam .	154.25	m²		
F2.22	Sides and soffit of 4th floor beams.	131.75	m²		
F2.23	Sides and soffit of 1st floor slab	644.00	m²		
F2.24	Sides and soffit of 2nd floor slab	310.00	m²		
F2.25	Sides and soffit of 3rd floor slab	644.00	m²		
F2.26	Sides and soffit of 4th floor slab	102.00	m²		
F2.27	In work top(Ground floor)	10.20	m²		
F2.28	In bench (Ground floor)	15.20	m²		
	F3 - REINFORCEMENT IN INSITU CONCRETE				
	Note: **Rates shall be included for** **1. Cleaning, cutting, bending, fabricating with gauge 18 binding wire and placing in position.** **2. Holding and supporting including temporary fixing supports, hingers, binding wire spaces & tor steel stools.which is required for the proper completion of the work.** **3. Providing all necessary laps.**				

ORIGINAL

127

Item	Description	Qty.	Unit	Rate Rs.	Amount Rs.
	4. Plain rounded Mild steel of characteristic strength 250 N/mm² to BS4449 **5. High Yield steel of characteristic strength 460 N/mm² to BS4449 & 4461** **Mild steel round bar diameter n.e. 10 m for the following items**				
F3.01	In ground floor lintols	150.00	Kg		
F3.02	1st floor lintols	57.00	Kg		
F3.03	2nd floor lintols	33.00	Kg		
F3.04	3rd floor lintol	86.00	Kg		
F3.05	4th floor lintols.	19.00	Kg		
F3.06	Column, ground floor level to 1st floor level.	1,280.00	Kg		
F3.07	Column, 1st floor level to 2nd floor level.	864.00	Kg		
F3.08	Column, 2nd floor level to 3rd floor level.	864.00	Kg		
F3.09	Column, 3rd floor level to 4th floor level.	526.00	Kg		
F3.10	Column, 4th floor level to roof beam level.	1,007.00	Kg		
	High-yield tor steel bars diameter n.e. 10mm for the following items.				
F3.11	Staircase footing	23.00	Kg		
F3.12	Staircase ground floor to 1st floor.	264.00	Kg		
F3.13	Staircase 1st floor to 2nd floor.	90.00	Kg		
F3.14	Staircase 2nd floor to3rd floor.	90.00	Kg		
F3.15	Staircase 3rd floor to 4th floor.	90.00	Kg		
F3.16	1st floor beams	1,254.00	Kg		
F3.17	2nd floor beams	1,350.00	Kg		
F3.18	3rd floor beams	1,117.00	Kg		
F3.19	4th floor beams	461.00	Kg		
F3.20	Roof beams	406.00	Kg		
F3.21	1st floor slab	3,950.00	Kg		
F3.22	2nd floor slab	2,200.00	Kg		

ORIGINAL

125

Item	Description	Qty.	Unit	Rate Rs.	Amount Rs.
	BILL NO G **MASONRY WORKS** **Note** **a.Brick and Block shiuld be of superior quality subject to take prior approval by the engineer.** **b. Mortar used for block work shall be 1:5 cement and sand mixture unless otherwise specified.**				
	G1 - BLOCK WORK				
G1.01	100mm thick block work in cement and sand mortar 1:5 in ground floor.	195.00	m²		
G1.02	200mm thick block work in cement and sand mortar 1:5 ground floor.	795.00	m²		
G1.03	100 mm thick block work in cement and sand mortar 1:5 in 1st floor.	40.00	m²		
G1.04	200mm thick block work in cement and sand mortar 1:5 1st floor.	380.00	m²		
G1.05	100mm thick block work in cement and sand mortar 1:5 in 2nd floor.	21.00	m²		
G1.06	200mm thick block work in cement and sand mortar 1:5 2nd floor.	201.00	m²		
G1.07	100 mm thick block work in cement and sand mortar 1:5 in 3rd floor level to roof level.	24.50	m²		
G1.08	200 mm thick block work in cement and sand mortar 1:5 3rd floor level to roof level.	1,345.00	m²		
	G2 - RUBBLE WORK **Random rubble masonry in cement & sand mortar 1:5 in foundations**				
G2.01	Wall foundation	50.00	m³		
G2.02	Retaining wall for ramp	5.00	m³		
	Total carried over to summary				

ORIGINAL

124

Item	Description	Qty.	Unit	Rate Rs.	Amount Rs.
	BILL NO H **WATER PROOFING**				
	Note: **The water proofing contractor (or sub contractor) should be a registered specialist contractor at the ICTAD in the category of water proofing.**				
	The contractor shall submit a written warranty of at least 10 year to cover on the quality of the material, suitability of the material for the situation and the workmanship including water tightness.				
	The water proofing material shall confirm to relevant British, Euro or ASTM specifications.				
	Applying of cementitious water proofing material "Marpalastic or equivalent over the plastered Masonary surface over the watyer/waste water/Hot water pipes and protective plaster act as base for the wall/ floor tile. For the following items				
H.01	Ground floor toilet Areas.	151.00	m²		
H.02	1st floor toilet Areas.	51.50	m²		
H.03	2nd floor toilet Areas.	54.50	m²		
H.04	3rd floor toilet Areas.	66.25	m²		
H.05	**DPC** 20mm thick D.P.C. in cement sand 1:2 finished with 2 coats of D.P.C. tar and blinded with sand.	98.00	m²		
H.06	**Horizontal D.P.M.** Gauge 1000 polythene damp proof membrane with 150 mm laps and laid under floors.	416.00	m²		
	Total carried over to summary				

ORIGINAL

Item	Description	Qty.	Unit	Rate Rs.	Amount Rs.
J.08	Supply and laying 50mmx50mm GI mesh consist with 2mm wires for concrete tiers and ramp.	560.00	m²		
J.09	Supply assemble and fix GI grill and GI gate with horizontal and vertical 4mm thick GI box bars of 100mmx100mm, 75mmx75mm, 50mmx50mm, 25mmx25mm as per detail drawing.(Job No.2017/14 sheet No.06/10)	85.32	m²		
	Total carried over to summary				
	BILL NO K **METAL WORK** **Note:**				
	The work shall include supplying, fabricating and installation of partition & doors etc. made of powder coated aluminium sections having a minimum powder coating of 60+5 microns thickness & colour bonded. Rate shall be included for 5mm thick clear glass, rubber beadings, stainless steel screws, rawl plugs, neoprene gaskets, locks, aluminium hinges, bar hinges and push plates etc. (Extrusions to be of 1.8mm for minimum thickness for doors & 1.5mm for window frame). Samples shall be submitted for the approved of Engineer before use.				
	The Aluminum alloy to be used shall conform to the requirements of BS 1474:1987 - AA 6063 surface treatment shall conform to BS 1615 & BS 3987.				
K-01	Supply and fix powder coated aluminium framed glazed & Aluminium panelled double door as per detail. (D1- 1200mm x 2100 mm)	08	Nr.		
K-02	Supply and fix powder coated aluminium framed glazed & Aluminium panelled door as per detail. (D2- 900mm x 2100 mm)	09	Nr.		
K-03	Supply and fix Heavy duty PVC framed PVC door as per detail. (D3-750mm x 2100 mm)	40	Nr.		

ORIGINAL

121

'tem	Description	Qty.	Unit	Rate Rs.	Amount Rs.
K-04	Supply and fix Heavy duty PVC framed PVC door as per detail. (D4-900mm x 2100 mm)	09	Nr.		
K-05	Supply and fix powder coated aluminium framed single sash glazed swing door as per detail. (D5-1100mm x 2100 mm)	01	Nr.		
K-06	Supply and fix powder coated aluminium framed glazed & Aluminium door with fixed glass on top as per detail. (D6- 900mm x 2700 mm)	01	Nr.		
K-07	Supply and fix powder coated aluminium framed glazed aluminium door- window with louvers on top as per detail. (DW1- 1200mm x 600 mm)(1200mmx2300mm)	05	Nr.		
K-08	Supply and fix powder coated aluminium framed glazed aluminium window with louvers on top as per detail. (W- 1200mm x 600 mm)(1200mmx2300mm)	06	Nr.		
K-09	Supply and fix powder coated aluminium framed glazed aluminium window with louvers on top as per detail. (W1- 750mm x 600 mm)(600mmx2300mm)	16	Nr.		
K-10	Supply and fix powder coated aluminium framed glazed aluminium window with louvers on top as per detail. (W4- 2400mm x 600 mm)(2400mmx1300mm)	05	Nr.		
K-11	Supply and fix powder coated aluminium framed glazed aluminium window with louvers on top as per detail. (W6- 3000mm x 600 mm)(3000mmx1300mm)	05	Nr.		
K-12	Supply and fix powder coated aluminium framed glazed aluminium window with louvers on top as per detail. (W7- 750mmx2.8500 mm)	09	Nr.		
K-13	Supply and fix powder coated aluminium framed glazed aluminium window with louvers on top as per detail. (W8- 1200mmx3200 mm)	04	Nr.		

ORIGINAL

120

Item	Description	Qty.	Unit	Rate Rs.	Amount Rs.
K-14	Supply and fix powder coated aluminium framed aluminium louvers as per detail. (W9- 1500mmx2250 mm)	20	Nr.		
K-15	Supply and fix powder coated aluminium framed glazed aluminium fanlight with louvers on top as per detail. (FL- 750mmx600 mm)(750mmx800mm)	17	Nr.		
K-16	Supply and fix powder coated aluminium framed glazed aluminium fanlight with louvers on top as per detail. (FL1- 750mmx2300 mm)	06	Nr.		
K-17	Supply and fix powder coated aluminium framed glazed aluminium fanlight with louvers on top as per detail. (FL2- 1200mmx600 mm)(1200mmx800mm)	03	Nr.		
K-18	Supply and fix powder coated aluminium framed glazed aluminium fanlight with louvers on top as per detail. (FL3- 1800mmx600 mm)(1800mmx800mm)	04	Nr.		
K-19	Supply and fix powder coated aluminium framed glazed aluminium fanlight with louvers on top as per detail. (FL4- 2100mmx600 mm)(2100mmx800mm)	02	Nr.		
K-20	Supply and fix powder coated aluminium framed glazed aluminium fanlight with louvers on top as per detail. (FL5- 750mmx1350mm)	14	Nr.		
K-21	Supply and fix powder coated aluminium framed glazed aluminium fanlight with louvers on top as per detail. (FL6- 1800mmx1350mm)	03	Nr.		
K-22	Supply and fix powder coated aluminium framed glazed aluminium fanlight with louvers on top as per detail. (FL7- 2100mmx1350mm)	05	Nr.		
K-24	Supply and fix powder coated aluminium framed glazed aluminium fanlight as per detail. (FL8- 750mmx800mm)	01	Nr.		

ORIGINAL

119

Item	Description	Qty.	Unit	Rate Rs.	Amount Rs.
K-14	Supply and fix powder coated aluminium framed aluminium louvers as per detail. (W9- 1500mmx2250 mm)	20	Nr.		
K-15	Supply and fix powder coated aluminium framed glazed aluminium fanlight with louvers on top as per detail. (FL- 750mmx600 mm)(750mmx800mm)	17	Nr.		
K-16	Supply and fix powder coated aluminium framed glazed aluminium fanlight with louvers on top as per detail. (FL1- 750mmx2300 mm)	06	Nr.		
K-17	Supply and fix powder coated aluminium framed glazed aluminium fanlight with louvers on top as per detail. (FL2- 1200mmx600 mm)(1200mmx800mm)	03	Nr.		
K-18	Supply and fix powder coated aluminium framed glazed aluminium fanlight with louvers on top as per detail. (FL3- 1800mmx600 mm)(1800mmx800mm)	04	Nr.		
K-19	Supply and fix powder coated aluminium framed glazed aluminium fanlight with louvers on top as per detail. (FL4- 2100mmx600 mm)(2100mmx800mm)	02	Nr.		
K-20	Supply and fix powder coated aluminium framed glazed aluminium fanlight with louvers on top as per detail. (FL5- 750mmx1350mm)	14	Nr.		
K-21	Supply and fix powder coated aluminium framed glazed aluminium fanlight with louvers on top as per detail. (FL6- 1800mmx1350mm)	03	Nr.		
K-22	Supply and fix powder coated aluminium framed glazed aluminium fanlight with louvers on top as per detail. (FL7- 2100mmx1350mm)	05	Nr.		
K-24	Supply and fix powder coated aluminium framed glazed aluminium fanlight as per detail. (FL8- 750mmx800mm)	01	Nr.		

ORIGINAL

118

Item	Description	Qty.	Unit	Rate Rs.	Amount Rs.
K-25	Supply and fix powder coated aluminium framed fixed glazed aluminium window with louvers on top as per detail. (FG- 3000mmx600mm)(3000mmx1300mm)	01	Nr.		
K-26	Supply and fix steel framed steel grill door. (GD-2000mmx2100mm)	01	Nr.		
K-27	Supply and fixing natural aluminium roller door consisting aluminium slats to the thickness of 1.2mm, centre bar, pulleys, side plate with the racers, fabricating the mechanical box with M.S. square tubes and covering the box and fixing on site with the bottom bars and necessary U channels. (RD-3000mm x 2100mm)	03	Nr.		
K-28	Supply and fix G.I.pipe 900mm high hand rail pasted to 50mm dia G.I. pipe with Epifix or similar water proof adhesive including 50mm dia steel uprights welded to steel base plate (100mm c/c). 10mm thick steel base plate to be fix to concrete steps with anchor bolts, all as per detail (Job No.2017/14 sheet No.04/10).(Ground floor to 4th floor level)Rate shall include for applying two coats of anti-corrosive paint and two coats of enamal paint.	130.00	Lm		
	Total carried over to summary				
	BILL NO. L				
	WOOD WORK				
	L2 - JOINERY				
	a. Timber usage **The purpose of timber shall be structural and furniture use.** **b. Quality grades and compliance with structural adequacy**				
	The timber shall be recognized based on the modules of elasticity and density at the specified moisture content at the service environment.				

ORIGINAL

117

Item	Description	Qty.	Unit	Rate Rs.	Amount Rs.
	c. Service environment Service environment and final exposure of timber shall be at a temperature of around 24^0C and plus or minus 5^0C and the relative humidity of the surrounding air between 55% to 60% and as such timber will attain an average moisture content not exceeding 12%. d. Standards Timber shall be supllied in accordance with the standards grading rules applicable to the country of origin. The applicable standard shall be furnished by the contractor in writing along the sample submission for testing. e. General requirement Timber for the structural purpose shall be in the density range of 800 to 900kg/m^3 and the same applicable to timber for furniture is 600 to 750kg/m^3 at moisture content at service condition. f. Seasoning by preservative treatment The timber should be made durable by preservative traetment. Thus lowhazard and non piosonous timber protection shall be adopted to achieve the moisture content under service environment. Timber shall be seasoned to achieve the specified moisture content under service environment with a suitable drying method. g. Rates shall be include the Brass hinges, locks, handles & all necessary accessories which should equel to existing accessories and prior approvel to be taken from the project Architect to finished the work. Finishes and size for timber All timber sizes mentioned should be finished sizes.It is the responsibility of the contractor to work out the sections of the market available timber and select suitable sections to achieve the required sectional dimentions.				

ORIGINAL

116

Item	Description	Qty.	Unit	Rate Rs.	Amount Rs.
	All timber work should be done as per detailed drawing and match to furniture. **A prerequisite of all painting and decorative finishing system is that they shall be compatible not only to each of the constituent layers of the systems,but also to the delivery finish of the material to be decorated. The contractor is advised to consult the manufacturers of painting material before using the same.** **prior approval should be taken from the Engineer for this paintings and colours.** **painting system shall consist of five-coat-work- that is, two coats for all timber work, solvent based tinting stain and two coat clear polyurethane base coats for all timber work, solvent based tinting stain and two coat of clear polyurethane top coat(seyerlack or eqvualent 0with matt finish for all timber work.** **Manufactures specifications shall be followed in application method .all timber members shall contain minimum number of knotss that must be treated prior to priming.**				
L2-01	Supply and fix timber framed timber cupboard as per Architec instructions. Rate shall include the all necessary accessories to finished the work. [(Job No.2017/14 Sheet No 05/10) (Size - 1100mm x500mmx2000mm])	1.00	no		
	Total carried over to summary				
	BILL NO.M **CLADDING**				
M-01	Supply and fix open groove type Pvdf coated Aluminium Composite wall clading of 4mm thickness with both sides Pvdf coated aluminium sheets of 0.4mm thick including powder coated aluminium inner frame work to vertical walls up to 30'-0". Rate shall include for scaffolding.	335.00	m²		
	Total carried over to summary				

ORIGINAL

115

Item	Description	Qty.	Unit	Rate Rs.	Amount Rs.
	BILL NO. P **ROOF AND ROOF PLUMBING**				
P-01	Supply and fix 0.47mm thick Zn/Al sheet roof laid on steel frame work of joints to be properly connected with an adequate side slope and to ensure water tightness along the entire length and complete to working order.(Roof structure measured separately).	850.50	m²		
P-02	Supply and lay 5mm thick double side duble aluminium foil heat reflecting & sound proof material insallation to underside of roof, supported with Gauge 18, 75mm x 75mm GI mesh and complete to working order. Rate shall include for scaffolding.	850.50	m²		
P-03	Supply and fixing zinc aluminium valance board 450mm girth with 20mmx5mmx12mm long flat iron bracket 2'-0" c/c and complete to working order.Rate shall include for scaffolding.	43.60	m		
P-04	Supply and fix proprietary coated zincalum gutter (minimum base metal thick of sheet 0.40mm and minimum total thick 0.47mm & medium size-Girth 470) complete with end cap, running joints etc.All joints to be properly connected with an adequate side lap not less than 225mm length and with sealent to ensure water tightness along the entire length of the gutter and including galvanized offset gutter brackets at 450mm centers with an adequate slope as directed and fix in position.	43.60	m		
P-05	Supply and fixing zinc aluminium square type down pipes(medium size girth 470 & minimum base metal thick of sheet 0.40mm and minimum total thick 0.47mm)complete with necessary socket elbow & bend .All joints to be properly connected and with sealant to ensure water tightness along the entire length.Down pipe bracket " 1.0m c/c.	215.00	m		
	Total carried over to summary				

ORIGINAL

114

Item	Description	Qty.	Unit	Rate Rs.	Amount Rs.
	BILL NO. Q PLUMBING AND SANITARY INSTALLATIONS Note: Any other make/brand that has equivalent performance characteristics are considered as equivalent provided such fittings met with following criteria (a) Has an authorized local agent in Sri Lanka (b) The local agent has been in the trade of the offered make for not less than 5 years (c) The offered sanitary fittings has a 10 Year manufacturer's warranty issued by the agent. (d) The cistern mechanism shall have an assurance for the availability of spares for the next 3 years. (e) The fittings are manufactured in conformity to BS, JIS, A.S.T.M., A.S. or S.L.S. standards (f) The dimensions are and performance characteristics are in par with the stated model. (g)The brands that may be considered as equivalent are "American standered/Rocell" or any other approved make which prior approval to be obtained (h) Plumbing work should be carried out by a plumber licensed by the CMC and executed in accordance with the specifications and requirement of the Water Supply & Drainage Division of C.M.C. (i) Provisions should be made by the tenderers to submit the necessary plans and the payment of service connection fee to the National Water Supply & Drainage Board. (j) All water conduits shall be of standard quality PVC tubes of approved quality and approved by the National Water Supply & Drainage Board gauge to be 1000 UPVC quality.				

ORIGINAL

113

Item	Description	Qty.	Unit	Rate Rs.	Amount Rs.
	(k) Rates shall be inclusive of bends, valves, reduces joints,end caps etc. Necessary for the installation of service including excavation, laying, testing, refilling of trench & making good surface complete.				
Q.01	Supply & fix/lay 20mm dia PVC pipes	230.00	m		
Q.02	Supply & fix/lay 25mm dia PVC pipes	165.00	m		
Q.03	Supply & fix/lay 32mm dia PVC pipes	70.00	m		
Q.04	Supply and installation of vanity type wash basin of "*American Standard*" or "Rocell" brand, with waste & plug or approved equivalent. On concrete vanity slab. (Vanity top concrete slab & tile laying measured separatly.)	08	Nr.		
Q.05	Supply and fix porcelain wall hung wash basin and pedestal with overflow hole and single tap hole in center of approved equivalent complete to working order inclusive of the 1 1/4" chromium plated waste outlet and 1 1/4" chromium plated siphon cleanable bottle trap of approved equivalent including approved quality pillar tap for ground floor level.	08	Nr.		
Q.06	Supply and fix white vitreous china floor standing wash basin and pedestal with overflow hole and single tap hole in center of *"Rocell"* brand or approved equivalent complete to working order inclusive of the 1 1/4" chromium plated waste outlet of *"Rocell"* brand and 1 1/4" chromium plated siphon cleanable bottle trap of *"Rocell"* brand .	16	Nr.		
Q.07	Supply and fix chromium plated piller tap for wash basin .	24	Nr.		
Q.08	Supply and fix Chromium plated hand Bidet Spray of "American standered /Rocell" brand or approved equivalent complete to working order .	36	Nr.		

ORIGINAL

112

Item	Description	Qty.	Unit	Rate Rs.	Amount Rs.
Q.09	Supply and fix white vitreous china floor standing close couple semi back to wall water closet suite with wash down flushing with 6/3liter sdual flushing ,including vario drain bend and two lateral holes for bottom water connection ,Ptrap ,cistern with water inlet from rear of" Rocell" brand&model "UrbanD" orapproved equivalent complete to working order inclusive of universal bend of "Rocell" brand & model "Vario Joint".	35	Nr.		
Q.10	Supply and fix 5mm thick mirror of size 3000mm x 1200 mm double coated with pencelage back strecher. (Ground floor)	02	Nr.		
Q.11	Supply and fix 5mm thick mirror of size 600mm x 800mm double coated with pencelage back strecher.	06	Nr.		
Q.12	Supply and fix ceramic wall hung rinse wash basin for disabled of approved equivalent with waste & plug .	01	Nr.		
Q.13	Supply and fix white ceramic water closet suite for the disabled of approved equivalent ,Cygnet tank and Seat and cover or approved equivalent complete to working order.	01	Nr.		
Q.14	Supply and fixing stainless steel vertical grab rail (600mm) in disable toilet	01	Nr.		
Q.15	Supply and fixing stainless steel floor mounted grab rail (680mm)	01	Nr.		
Q.16	Supply and fixing stainless steel drop down rail	01	Nr.		
Q.17	Supply and fix stainless steel 600mm long Single Towel Bar of approved equivalent.	20	Nr.		
Q.18	Supply and fix cloth hook of approved quality	40	Nr.		
Q.19	Supply and fix stainless steel soap tray.	42	Nr.		
Q.20	Supply and fix 1/2" Bib tap " Water-tec" (as per Manufacturer's specification)	42	Nr		
Q.21	Supply and fix Chromium plated Shower.	08	Nr		

ORIGINAL

1H

Item	Description	Qty.	Unit	Rate Rs.	Amount Rs.
Q.22	Supplying and fix 20mm dia. chromium plated Angle valve.	110	Nr.		
Q.23	Supplying and fixing 32mm wheel valve "Pegler" Brand or approved equivalent.	02	Nr.		
Q.24	Supplying and fixing 25mm wheel valve "Pegler" Brand or approved equivalent.	07	Nr.		
Q.25	Supplying and fixing 20mm stop valve "Pegler" Brand or approved equivalent.	23	Nr.		
Q.26	Supplying and fixing chromium plated conceale valve for shower.	08	Nr.		
Q.27	Suply and fix ceramic urinal with auto flushing system valve or approved equivalent complete working order.	03	Nr.		
Q.28	Supply and fix PVC Catch pit floor trap of size 100mm dia. Internal including PVC grating embedded in the floor.	50	Nr.		
Q.29	Construction of pit for water meter internal dimensions 450mm x 450mm x 650mm with 75mm thick brick base and 112.5mm thick side wall in cement and sand mortar 1:3, plastered with cement mortar 1:3 to a rough finish and providing 75mm thick removable pre cast cover slab in cement concrete grade 25 & reinforced with 6mm dia plain round hot-rolled mild steel bars at 150mm centres bothways and 12mm dia lifting handles.	01	Nr.		
Q.30	1000 liters plastic water tank of approved quality kept in position complete as per detail plan.	06	Nr.		
Q.31	Allow for supply & fix water meter		Pro.sum		75,000.00
Q.32	Allow for water Pressure testing for PVC pipes.		Item		
Q.33	Allow for connection fee for water supply Rate to be included for breaking the road surface & reinstate temporary after laying the line as directed.		Pro.sum		300,000.00

ORIGINAL

40

Item	Description	Qty.	Unit	Rate Rs.	Amount Rs.
	5000lt. UNDER GROUND WATER SUMP **All the items should follow the relevant specifications mentioned in other bills.** **Earth Work**				
2.Q.34	Excavation for sump and meter chamber as per detail drawing.	11.00	m^3		
2.Q.35	Back filling with excavated earth cleaned spread, watered and well rammed in 150mm layers and consolidated.	3.50	m^3		
2.Q.36	Carting away excess earth from site as directed.	7.00	m^3		
	Concreter				-
2.Q.37	50mm thick lean concrete grade 15 in base.	7.00	m^2		
					-
	Cement concrete grade 25 for the following items.				
2.Q.38	In base and side walls.	4.00	m^3		
2.Q.39	In 200mm thick cover slab.	1.25	m^2		
2.Q.40	750mm x 750mm x 125mm thick pre cast cement concrete cover in Gr 25 reinforced with 10mm dia tor steel bars at 150mm c/c both ways and kept in position with grout complete as per detail plan..	01	Nr		
2.Q.41	450mm x 450mm x 75mm thick pre cast cement concrete cover in Gr 25 reinforced with 6mm dia mild steel bars at 150mm c/c both ways and kept in position with grout complete as per detail plan.(water meter)	01	Nr		
	Bar Bender				-
	In base slab & side walls				
2.Q.42	10mm dia deformed hot-rolled high-yield bars .	485.00	Kg		
	In cover slab				
2.Q.43	10mm dia deformed hot-rolled high-yield bars .	85.00	Kg		
					-
	Form Work				
2.Q.44	In base & side walls.	16.00	m^2		

ORIGINAL

Item	Description	Qty.	Unit	Rate Rs.	Amount Rs.
2.Q.45	In cover slab.	7.50	m²		
	Brick Work (water meter)				
2.Q.46	112.5mm thick brick work in cement & sand mortar 1:3 in meter chamber including 112.5mm thick brick base.	0.75	m²		
	Water proofing				
2.Q.47	Application of crystaline type waterproofing material for under ground sump, (water proofing material recommended for portable water storage tanks) products marketed/installed by a specialist contractor registered at ICTAD.	22.00	m²		
	Plasterer				
2.Q.48	20mm thick plastering internally with cement and sand mortar 1:2 finished with neat cement.	22.00	m²		
2.Q.49	20mm thick cement rendering on cover slab with cement and sand mortar 1:2 to a semi-rough finish.	5.00	m²		
2.Q.50	12mm thick internal plastering to water meter chamber with cement and sand mortar 1:3 finished with neat cement and apply two coats of approved quality water proof material.	0.75	m²		
2.Q.51	20mm thick external plaster to sump from 150mm below normal ground level with cement and sand mortar 1:2 to a semi-rough finish.	3.50	m²		
	Plumbing Arrangement				
2.Q.52	Supply & fix 32mm dia inlet pipe.	5.00	Lm		
2.Q.53	Supply & fix approved quality 32mm dia ball valve.	1.00	Nr.		
2.Q.54	Supply & fix approved quality 32mm dia gate valve.	1.00	No.		
2.Q.55	Supply & fix 32mm dia suction pipe.	10.00	Lm		
2.Q.56	Supply & fix 32mm dia foot valve.	01	Nr.		

ORIGINAL

108

Item	Description	Qty.	Unit	Rate Rs.	Amount Rs.
2.Q.57	Allow for construction of 2400mm x 3000mm x 2000mm pump house with 75mm thick cement concrete base in grade 20 reinforced with 10mm dia. high-yield steel bars at 150mm c/c bothways, 225mm thick brick walls in cement & sand mortar 1:5, 75mm thick top slab in cement concrete in grade 20, reinforced with 10mm dia. high-yield steel bars at 150mm c/c bothways, external and internal plaster with cement,lime and sand mortar 1:1:5 to a rough finish, providing 1050mmx600mm door with angle iron frame work panelled with 3mm thick M.S.sheets fixed complete with necessary fittings providing a brass pad lock and applying two coats of red lead anticorrosive paint to both sides.(slab with water proofing)		Item		
	Total carried over to summary				
	BILL NO.S **ELECTRICAL INSTALLATION**				
	(a) For the Full description of materials and workmanship refer "Specifications", "Preambles" and "Drawings".		Note Note		
	(b).Supply, wire, install and commissioning of the following items as per the latest Edition of the IEE Wiring Regulations.		Note		
	(c). All Materials and accessories shall be of high quality type subject to the approval of the Engineer.				
	GENERAL				
	The Bidders are requested to refer the General notes, Drawings and study the taxes, safety procedures, site conditions before the pricing. The Bidder shall provide all dimensions, and technical information, of all builders work to the Engineer/Consultant in accordance with the programme of work.		Note		

ORIGINAL

Item	Description	Qty.	Unit	Rate Rs.	Amount Rs.
	PREAMBLES NOTES				
	Not withstanding Preamble notes of the standard method of Measurement of Building Works, the Bidder shall refer to the specification and Drawings for full particulars and descriptions of workmanship and shall include prices for the full intent and meaning thereof in.		Note		
	Prices are deemed to include for the following, unless specifically excluded or provided separately;		Note		
	Prices for the panels boards deemed to include for finished enclosures, bus bars , panels locks , legend plates , danger boards , DB's , ACB's , MCB's and the required fixing materials like coach screws , bolts ,nuts and foundations etc.		Note		
	Prices of Distribution boards deemed to include for finished enclosures, MCB's, ELCB's, Neutral links dummy plates if any and the required chipping, fixing of DB in walls etc.		Note		
	Prices of Cable running in the cable trays deemed to include for cable clamps, tags and cable ferrules		Note		
	Prices for Under Ground Cable deemed to include for excavation, protection of cable with tiles, warning tapes, refilling with excavated earth, consolidation / compaction etc.		Note		
	Prices for Cable termination deemed to include for double compression glands, accessories for crimping / soldering, earth tags and earth connection lugs etc.		Note		
	Prices for Cable termination deemed to include all required structural steel members, welding, screws, bolts and nuts required for fixing etc. including one coat of primer and two coats of paint.		Note		

ORIGINAL

Item	Description	Qty.	Unit	Rate Rs.	Amount Rs.
	Prices deemed to include for screws, nails, bolts, nuts, nipples, standard cable fixing or supporting clips, saddles brackets, straps, rivets, plugs and similar items and all incidental accessories.		Note		
	Prices for Earth pits deemed to include for excavation, backfilling, compaction, cable covers, warning tapes, GI/Cu pipes, charcoal, salt and other required materials etc.		Note		
	Prices deemed to include for interviewing and connections between components and control gear within the board.		Note		
	Prices deemed to include for cutting and jointing cable for carriers at fittings together with cutting or forming openings in cable carriers for conduits, entries from equipment and control gear and similar items; cradles, pin racks for support.		Note		
	Prices for conduits deemed to include for standard junction boxes and fittings and fixing conduits to or through all building surfaces.		Note		
	Prices deemed to include for all cable supports and fixings; providing draw wires, draw cables and similar items for drawing or hoisting cables.		Note		
	Prices deemed to include for all items listed for conduits, cables and conduit sleeves; all cable joints and skinning ends and connecting cables to switches, outlets, accessories, light fittings and similar items.		Note		
	Prices are also deemed to include the following unless specifically excluded or provided separately;		Note		
	Any additional costs in complying with the programme such as staging and/or phasing, access limitations working in or adjacent occupied areas and maintenance of existing services as set out in the Bid Documents;		Note		
	Co-ordination of works between contractor and subcontractors and/or Principal		Note		

ORIGINAL

105

Item	Description	Qty.	Unit	Rate Rs.	Amount Rs.
	Strict control to minimize the effects of noise, vibration, dust, mud, smoke, fumes, interruption or hindrance of access and other nuisance which could adversely affect the occupants of adjacent buildings;		Note		
	Rectification and making good to services disturbed during construction; and chased walls plaster		Note		
	All chasings in walls, beams, column, slabs wherever required		Note		
	Complying with the relevant Acts, By-laws and regulations.		Note		
	Testing all installations as required and specified.		Note		
	Submit notices, obtaining permits and completion certificates, paying fees and charges in connection with the relevant installations.		Note		
	Obtaining and submitting all guarantees and warranties as specified.		Note		
	Quality Assurance and control as specified.		Note		
	Providing plans, diagrams, manuals and similar items as required for the relevant installations.		Note		
	Coordinating penetrations in connection with the installations.		Note		
	Maintaining operation of the existing buildings during the Contract.		Note		
	Submission of As Built Drawings		Note		
	Electrical services installation in accordance with the specification and Drawings including works by the electrical services sub-contractor listed in the Hydraulics, Mechanical, and Fire Services specifications.		Note		

ORIGINAL

104

Item	Description	Qty.	Unit	Rate Rs.	Amount Rs.
	Penetrations and chases required through new existing walls, ceilings and floors for electrical services cable and fittings including additional support framing members where required.		Note		
	Providing holes and trimmings, suspension and trimming support for the installation of luminaries and speakers in ceilings.		Note		
	Provision of rigid framework in stud walls for the fixing of cable support channels, distribution boards, control panels and similar equipment.		Note		
	Provision of structural support for the fixing of television brackets, luminaries and examination luminaries.		Note		
	Lifting the panels to required floors with necessary plant and machinery.		Note		
	Cable trays shall be measured net in running meters.		Note		
	All back box to be deep type		Note		
	All socket outlets to be switched and shuttered type		Note		
	All socket outlets to be SLS approved 13A socket outlets to BS 1363 unless otherwise specified		Note		
	All underground cables to be armoured type.		Note		
	All outdoor underground cables used for lamp point wiring shall be 3 core unless otherwise specified.		Note		
	All tread bars and supportive accessories should be HDG.		Note		
	Light fittings should be Energy efficient light fittings including 5years warranty period.		Note		
	Specification for Manufacturing and supplying of lighting fixtures				

ORIGINAL

103

Item	Description	Qty.	Unit	Rate Rs.	Amount Rs.
	Number of years in business must be 10 years or more		Note		
	Registration of the business must be relevant to industry		Note		
	Should submitted company profile with current reputed project		Note		
	Product must be manufactured in a modular design enabling maintenance and must use E14 and E27 bulbs		Note		
	Switches, holders, wires and power sockets must be SLS certified/approved		Note		
	All brass items must be through and through brass and not plated brass		Note		
	All brass sheet items must be 18 gauge or 20 gauge		Note		
	Design must be according to CAD drawings submitted by Architect/Engineer		Note		
	Finishes must be according to approved sample		Note		
	Antique brass finish is required		Note		
	Samples to be provided by supplier cost and number of samples up to 3 to be supplied before approval		Note		
	Delivery, testing and setting up at site at supplier cost		Note		
	All items provided, supplied or given by a single supplier		Note		
	SUPPLY OF LAMP FITTINGS				
	Supply of the following lighting fixtures with all accessories as per the specifications. lamp fitting and accessories should be reputed makes as given in the specification.				

ORIGINAL

102

Item	Description	Qty.	Unit	Rate Rs.	Amount Rs.
S-01	Supply & install approved type Chandilier light fittings with approved type LED 18W (cool white) as shown in the electrical layout & complete wiring by using necessary accessories as flexible cables, sunk switches, sunk nut boxes and conduits using 2 x 2.5mm2 cu/pvc/pvc cables shall be approved by the architect. . Supply & install approved type LED high bay lights(160W and more than 25000 lumen light ouput) complete fittings as per the specifications according to the electrical layout & complete wiring using including cabling switches and all electrical work, The lights shall be properly hanged from the roof or the ceiling using rigid stem, chains and hooks. Prior approval shall be taken to the fitting, fixing method reccomended by the manufcturer. with 2 year warranty (and 50000hrs useful life). Philips or equvivalent approved. All the fittings shall remain in the same height from the floor. Accesories should be from the same manufacturer including driver etc. Refer Sample image A cabling as per the drawings from 2 x 2.5mm2 cu/pvc/pvc cable + Earth	01	nr		
S-02	3 rd floor Supply & install approved type wall bracket indoor lamp fittings with approved type LED 18W (cool white) as shown in the electrical layout & complete wiring by using necessary accessories as flexible cables, sunk switches, sunk nut boxes and conduits using 2 x 1.5mm2 cu/pvc/pvc cables. Lights near stairways shall be wired using two way switches	25	nr		
S-03	3 rd floor	9	nr		
S-04	2 rd floor	2	nr		
S-05	1 st floor	2	nr		

ORIGINAL

101

Item	Description	Qty.	Unit	Rate Rs.	Amount Rs.
	Supply & install approved type 215mm diameter x 35mm, 18W COB LED 1400lumen ceiling surface mounted circular light fitting (cool white) as shown in the electrical layout & complete wiring by using items as round blocks, ceiling roses 2 x 1.5 mm² Cu/PVC/PVC cable, flexible cable, sunk switches, sunk nut boxes and conduits or plastic casings etc. where necessary -2 year warranty .orange or similar shall be used.				
S-06	3 rd floor	2	nr		
S-07	2 rd floor	20	nr		
S-08	1st floor	21	nr		
S-09	Ground floor	75	nr		
	Supply & install approved type tubular mirror lamp complete fittings (=<10W) & complete wiring by as shown in the electrical layout & complete wiring by using necessary accessories as flexible cables, sunk switches, sunk nut boxes and conduits using 2 x 1.5mm2 cu/pvc/pvc cables.				
S-10	3 rd floor	4	nr		
S-11	2 rd floor	6	nr		
S-12	1st floor	6	nr		
S-13	Ground floor	15	nr		
	Supply and install Hand Dryer (Prime cost per Hand Dryer Rs. 5,000.00) and complete with wiring approved by the Engineer with 1 year warranty				
S-14	3 rd floor	4	nr		
S-15	2 rd floor	2	nr		
S-16	1st floor	2	nr		
S-17	Ground floor	6	nr		

ORIGINAL

100

Item	Description	Qty.	Unit	Rate Rs.	Amount Rs.
	Refer specifications for light fittings. Supply & install approved type LED high bay lights(85W and more than 10500 lumen light ouput) complete fittings as per the specifications according to the electrical layout & complete wiring using including cabling switches and all electrical work, The lights shall be properly hanged from the roof or the ceiling using rigid stem, chains and hooks. Prior approval shall be taken to the fitting, fixing method as per the specifications. with 2 year warranty (and 50000hrs useful life). Philips or equvivalent approved. All the fittings shall remain in the same height from the floor. Accesories should be from the same manufacturer including driver etc. cabling as per the drawings from 2 x 1.5mm2 cu/pvc/pvc cable + Earth				
S-18	2nd Floor	36	nr		
	Fans Supply & install approved type 56" sweep ceiling fans with dimmer type regulators with a switch -according to the electrical layout & complete wiring by using the same items as in No. 01 above + 2.5mm² Cu/PVC earth cable as per the specification. Fans shall not disturb the lights and aligned Air flow rate shall be 225 cu.m/min @ RPM 270 with tolerance as per SLS 814 and three star energy label as per SLS 1600. KDK- MRG model or equivalent with warranty				
S-19	2nd Floor	5	nr		
S-20	1st Floor	6	nr		
S-21	Ground floor	13	nr		

ORIGINAL

99

Item	Description	Qty.	Unit	Rate Rs.	Amount Rs.
	Socket outlets				
	Supply all materials and provide final sub circuit point wiring for the following outlets with PVC conduit, 10A switch and connectors Including other materials required to make complete installation as specified and as shown in the electrical drawings. All underground cables to be run in type uPVC pipes in standard trenches filled with sand, warning tapes and covering tiles.				
	Supply & install approved type 13A with switches as shown in electrical layouts & complete wiring by using 2.5mm² Cu/PVC/PVC cable + 2.5mm² Cu/PVC earth cable in PVC conduits with all fixing accessories				
S-22	3 rd floor	20	nr		
S-23	2 rd floor	6	nr		
S-24	1st Floor	8	nr		
S-25	Ground floor	30	nr		
	MAIN DISTRIBUTION SYSTEM				
	Supply and installation of electrical panel board three (3) phase, neutral and earth complete with powder coated steel sheet enclosure, hinged and lockable door as per specification and drawings		Note		
	Electrical Panel shall include MCCB, Isolator, MCBs, RCDs, Surge protectors, automatic change over switch, bus bars, terminals and all required accessories.		Note		
	Quantity and current rating of equipment to be installed in Panel boards shall be as given in the drawings.		Note		
	The doors of the MSB shall be lockable				
	Surface Finish : Polyester Powder Coated Colour : Grey RAL 7032/35				

ORIGINAL

98

Item	Description	Qty.	Unit	Rate Rs.	Amount Rs.
S-26	Main Switch Board (MDB)	1	nr		
	FEEDER CABLES (SUPPLY AND INSTALATION) Supply of 600/1000V feeder cables in cable tray/conduit, XLPE insulated or PVC insulated, PVC sheathed, copper conductor cable with three core/single core and earth cable including external cladding covering . All underground cables to be run in type uPVC pipes in standard trenches filled with sand, warning tapes and covering tiles.				
S-27	Power cable from Meter to MDB : 1x4C-95sqmm Cu/XLPE/PVC + 1C-50 Sqm Cu/PVC Earth	60	m		
S-28	Power cable from Meter to MDB : 1x4C-70sqmm Cu/XLPE/PVC + 1C-35 Sqm Cu/PVC Earth	20	m		
	DISTRIBUTION BOARD Supply and installation of electrical panel board three (3) phase, neutral and earth complete with powder coated steel sheet enclosure, hinged and lockable door as per specification and drawings.		Note		
	Electrical Panel shall include MCCB, Isolator, MCBs, RCDs, Surge protectors, automatic change over switch, bus bars, terminals and all required accessories.		Note		
	Quantity and current rating of equipment to be installed in Panel boards shall be as given in the drawings.				
S-29	DB-GF-01	1	nr		
S-30	DB-GF-02	1	nr		
S-31	DB-GF-03	1	nr		
S-32	DB-GF-04	1	nr		
S-33	DB-GF-05	1	nr		

ORIGINAL

97

Item	Description	Qty.	Unit	Rate Rs.	Amount Rs.
S-34	DB-GF-06	1	nr		
S-35	SDB-GF	1	nr		
S-36	DB-1F-01	1	nr		
S-37	DB-2F-01	1	nr		
S-38	DB-3F-01	1	nr		
	FEEDER CABLES (SUPPLY AND INSTALATION)				
	Supply of 600/1000V feeder cables in cable tray, Trunking/PVC conduit, XLPE insulated or PVC insulated, PVC sheathed, copper conductor cable with three core/single core & earth cable.		Note		
	Rate to include for supply and installation of cable terminations at both ends and necessary glands. All underground cables to be run in type uPVC pipes in standard trenches filled with sand, warning tapes and covering tiles.		Note		
S-39	Supply and install 10mm² Cu/PVC earth cable in conduits/flexible conduits and all other necessary accesories. All conduits/casing shall be camouflaged	145	m		
S-40	Supply and install 2x10mm² Cu/PVC/PVC +10mm2 cu/pvc earth wire in conduits/flexible conduits and all other necessary accesories. All conduits/casing shall be camouflaged	90	m		
S-41	Supply and install 4x10mm² Cu/PVC/PVC in conduits/flexible conduits and all other necessary accessories complete to working order. All conduits/casing shall be camouflaged	55	m		

ORIGINAL

96

Item	Description	Qty.	Unit	Rate Rs.	Amount Rs.
S-42	Supply and install 4x16mm² Cu/PVC/PVC + 16mm² E Cu/PVC and take the supply from the floor distribution board in conduits/flexible conduits and all other necessary accesories. All conduits/casing shall be camouflaged	35	m		
S-43	Supply and install Emergency light and complete the point wiring using 2Cx1.5sqmm Cu/PVC/PVC and 1Cx2.5 sqmm PVC/Cu earth cable in PVC conduits. C/w 13A Socket outlet.	10	nr		
S-44	Wiring of Exit light point using 2Cx1.5sqmm Cu/PVC/PVC and 1Cx2.5 sqmm PVC/Cu earth cable in PVC conduits. C/w 13A Socket outlet.	10	nr		
S-45	Supply and install 1"x1" single phase 1 HP water pump ,maximum head 103ft, output-discharge 700gph at 80ft, through a seperate MCB mounted on the distribution board together with a suitable floater switch, a switch to operate and other accessories. Complete wiring using 2.5mm^2 Cu/PVC/PVC cable + 2.5mm^2 Cu/PVC earth cable. Jinasena or equivalent with warranty	1	Nr.		
S-46	Supply and install 1"x1" three phase 1.5 HP water pump, maximum head 205ft, output-discharge 600gph at 150ft, through a seperate MCB mounted on the distribution board together with a suitable floater switch, a switch to operate and other accessories. Complete wiring using 2.5mm^2 Cu/PVC/PVC cable + 2.5mm^2 Cu/PVC earth cable. Shall be Jinasena or equvivalent with 2 year warranty	1	Item		
S-47	Provide an earth electrode copper plate 2'-0" x 2'-0" x 3mm thick at 2.0m depth including excavation and backfilling. Rate shall include connection to the main panel, sub main, earth clips & etc. with 1'-0" x 1'-0" x 1'-0" earth pit consist of 4 1/2" brick work , 3" thick Grade 20 concrete cover slab .(Earth wire paid separately)	1	Item		

ORIGINAL

95

Item	Description	Qty.	Unit	Rate Rs.	Amount Rs.
S-48	Provide an earth electrode 6'-0" long , 2" dia. x 2.3 mm thick GI pipe. Rate shall include connection to the main panel, sub main, earth clips& etc. with 1'-0" x 1'-0" x 1'-0" earth pit consist of 4 1/2" brick work , 3" thick Grade 20 concrete cover slab (Earth wire paid separately)	1	Item		
	<u>SUPPLY AND INSTALLATION POWDER COATED CABLE TRAYS /LADDER/TRUNKING.</u>				
	Supply, Installation, laying and connection of perforated hot-dipped galvanized Cable trunking with lid, bends, tees and clamps for fixing of cable with suitable anchor fastener for supporting and necessary hardware. The structural steel supports for the trunkings are to be provided at regular interval as per technical specifications.				
S-49	300 mm x 60mm cable Ladder for Electrical Power Cables	15	m		
	SUPPLY AND INSTALLATION POWDER COATED CABLE LADDER				
	Supply, Installation, laying and connection of Powder coated RAL (7032) Cable Ladder with clamps for fixing of cable with suitable anchor fastener for supporting and necessary hardware. The structural steel supports for the trunkings are to be provided at regular interval as per technical specifications.				
S-50	600 mm x 75mm cable Ladder For Electrical Power Cables. (Cable Tray with Lid- Powder Coated)	10	m		
	<u>Air Conditionning</u> Supply &install power supply points for Air conditioner units with switches & complete wiring by using 4x 2.5mm² Cu/PVC/PVC cable + 2.5mm² Cu/PVC earth cable with conduits or casing etc. where necessary. Use dedicated MCB for each air conditionor				

ORIGINAL

94

Item	Description	Qty.	Unit	Rate Rs.	Amount Rs.
S-51	1st Floor	4	nr		
	Supply &install power supply points for Air conditioner units with switches & complete wiring by using 2x 2.5mm² Cu/PVC/PVC cable + 2.5mm² Cu/PVC earth cable with conduits or casing etc. where necessary. Use dedicated MCB for each air conditionor.Double Pole Switch with red Neon Indicator and fixing. accessories.				
S-52	3rd Floor	1	Nrs		
S-53	2nd Floor	1	Nrs		
S-54	Ground Floor	6	Nrs		
	Supply and install wall mounted inverter type AC machine approved by the engineer of 12000Btu/hr capacity with all other necessary requirements including copper and drain piping as per the as per the drawing and specifications				
S-55	3rd Floor	1	Nrs		
	Supply and install wall mounted inverter type AC machine approved by the engineer of 18000Btu/hr capacity with all other necessary requirements including copper and drain piping as per the as per the drawing and specifications				
S-56	2nd Floor	1	Nrs		
S-57	Ground Floor	2	Nrs		
	Supply and install wall mounted inverter type AC machine approved by the engineer of 48000Btu/hr capacity with all other necessary requirements including copper and drain piping as per the as per the drawing and specifications				
S-58	1st Floor	4	Nrs		

ORIGINAL

Item	Description	Qty.	Unit	Rate Rs.	Amount Rs.
	Supply and install wall mounted inverter type AC machine approved by the engineer of 24000Btu/hr capacity with all other necessary requirements including copper and drain piping as per the as per the drawing and specifications				
S-59	Ground Floor	4	Nrs		
	FINAL DOCUMENT				
S-60	Preparation of Shop Drawings, as-built drawings, Handover document (including operation and Maintenance Manuals) in triplicates.		Item		
S-61	Labelling of Lamp fittings Lamp circuits, power circuits and Returns numbering according to the final as-built drawings.		Item		
S-62	Obtain a Chartered Electrical Engineer's Certificate for the final testing and commissioning report as per the BS7671 requirement.		Item		
S-63	CEB connection to the premises	Provisional sum			800,000.00
	Total Carried To Summary				
	BILL NO: T **FLOOR AND WALL FINISHES** **T1 - FLOOR FINISHES** **Note ; 1.Floor tile Samples shall be submitted for the approved of Architect before use** **2.The brands that may be considered as equivalent are Rocell/Lanka Tile or any other approved equalent.** **3.Homogenious porcelain floor tilling water absorption to weight to weight should be <0.5%,Modulus of Rupture(min)>25N/mm2** **20mm thick cement rendering on floor in cement and sand mortar 1:3 and floated with approved colour cement smooth finish .**				

ORIGINAL

92

Item	Description	Qty.	Unit	Rate Rs.	Amount Rs.
T1-01	In ground floor including tiers & stair case	240.00	m²		
T1-02	In first floor including stair case	540.00	m²		
T1-03	In second floor including tiers & stair case	705.00	m²		
T1-04	In third floor	600.00	m²		
T1-05	In fourth floor	124.00	m²		
	Skirting with 20mm thick cement rendering on floor in cement and sand mortar 1:3 and floated with approved colour cement smooth finish.(Above item)				
T1-06	In ground floor	40.00	m		
T1-07	In first floor	76.00	m		
T1-08	In second floor	38.50	m		
T1-09	In third floor	136.00	m		
T1-10	300mmx600mm approved quality semi gloss homogeneous Rocell/Lanka Tile or equvelant floor tiling bedded in cement and sand 1:3 and joints finished with coloured grout to match with coloure of tiles in ground floor.(Rate to be included the cost of 1:3 mortar levelling bed) . In ground floor	93.00	m²		
T1-11	Skirting with 600mm x 100mm approved quality homogeneous floor tiling on plastered surface of walls and joints finished with coloured grout to match with colour of tiles for the following items. (Above item)	70.00	m		
T1-12	600mmx600mm approved quality semi gloss homogeneous Rocell/Lanka Tile or equvelant floor tiling bedded in cement and sand 1:3 and joints finished with coloured grout to match with coloure of tiles in ground floor.(Rate to be included the cost of 1:3 mortar levelling bed) . In ground floor	170.00	m²		
T1-13	Skirting with 600mm x 100mm approved quality homogeneous floor tiling on plastered surface of walls and joints finished with coloured grout to match with colour of tiles for the following items. (Above item)	44.00	m		

ORIGINAL

91

Item	Description	Qty.	Unit	Rate Rs.	Amount Rs.
	300mmx600mm approved quality non slip homogeneous Rocell/Lanka Tile or equvelant floor tiling bedded in cement and sand 1:3 and joints finished with coloured grout to match with coloure of tiles in ground floor.(Rate to be included the cost of 1:3 mortar levelling bed) .				
T1-14	In ground floor	206.00	m²		
T1-15	In first floor	37.00	m²		
T1-16	In second floor	43.00	m²		
T1-17	In third floor	46.00	m²		
	T2 - WALL FINISHES **Note ; Samples shall be submitted for the approved of Engineer before use** **Note ;** **Wall tile samples shall be submitted for the approved of Architect before use** **1.Water absorption to weight should be 10%-20%,,Modulus of Rupture (min)>25N/mm².** 600mm x300mm approved quality polished porcelain Rocell/Lanka Tile or equvelant wall tiling on plaster surface of walls and joints finished with coloured grout to match with tiles in toilet area .				
T2-01	In ground floor	244.00	m²		
T2-02	In first floor	78.00	m²		
T2-03	In second floor	92.00	m²		
T2-04	In third floor	61.50	m²		
	16mm thick external plastering with cement and sand mortar 1:5 to a semi rough finish for the following items.				
T2-05	Ground floor walls and column.	436.00	m²		
T2-06	Ground floor reveals width n.e 300mm.	397.00	m		
T2-07	1st floor walls & column.	345.50	m²		
T2-08	1st floor reveals width n.e 300mm .	144.00	m		

ORIGINAL

90

Item	Description	Qty.	Unit	Rate Rs.	Amount Rs.
T2-09	2nd floor walls and column.	83.00	m²		
T2-10	2nd floor reveals width n.e 300mm .	59.00	m		
T2-11	3rd & fourth floor walls and column.	965.00	m²		
T2-12	3rd & fourth floor reveals width n.e 300mm .	158.00	m		
	16mm thick internal plastering with cement and sand mortar l:5 finished smooth with skim coat for the following items.				
T2-13	Ground floor walls & column..	1,537.00	m²		
T2-14	Ground floor width n.e 300mm in reveals.	596.00	m		
T2-15	1st floor walls & column.	533.50	m²		
T2-16	1st floor reveals width n.e 300mm .	201.60	m		
T2-17	2nd floor walls & column.	321.75	m²		
T2-18	2nd floor reveals width n.e 300mm .	103.00	m		
T2-19	3rd & fourth floor walls and column.	1,518.00	m²		
T2-20	3rd & fourth floor reveals width n.e 300mm .	236.55	m		
	10mm thick plastering side & soffit of stair case in cement & sand 1:5 finished smooth.				
T2-21	In ground floor	59.00	m²		
T2-22	In first floor	20.50	m²		
T2-23	In second floor	20.50	m²		
T2-24	In 3rd floor	20.50	m²		
	12.5mm thick plastering to internal walls with cement sand mortor 1:3 to a rough finish In toilet area.(screed backing to receive wall tiles.)				
T2-25	In ground floor	244.00	m²		
T2-26	In first floor	78.00	m²		
T2-27	In second floor	92.00	m²		
T2-28	In 3rd floor	61.50	m²		
	Total carried over to summary				

ORIGINAL

89

Item	Description	Qty.	Unit	Rate Rs.	Amount Rs.
	BILL NO . V **PAINTING**				
	Application of plaster coatings of thickness not less than 2mm using "Joint compound powder / Skimcoat ", or approved equivalent.Rate shall include for sand papering and surface preparation in sides & soffit of slab,staircase, beams.				
V-01	up to First floor.	920.00	m²		
V-02	up to Second floor .	765.00	m²		
V-03	up to 3rd floor.	856.00	m²		
V-04	up to 4th floor.	123.00	m²		
	Painting all external walls with two coats of approved quality and colour weathershield paint after preparing surface .				-
V-05	up to First floor.	466.00	m²		
V-06	up to Second floor .	370.00	m²		
V-07	up to 3rd floor.	87.50	m²		
V-08	up to roof level.	977.00	m²		
	Internal colour washing with two coats of approved quality and colour emulsion paint after applying one coat of filler .				-
V-09	up to First floor.	1,582.00	m²		
V-10	up to Second floor .	549.00	m²		
V-11	up to 3rd floor.	329.50	m²		
V-12	up to roof level.	1,536.00	m²		
V-13	Side & soffit of stair case .(ground to 4th floor)	122.00	m²		
	Total carried over to summary				

ORIGINAL

88

Item	Description	Qty.	Unit	Rate Rs.	Amount Rs.
	BILL NO W **DRAINAGE SYSTEMS** **Note:** **1.The work should be carried out by a contractor licensed by the CMC and in accordance with the regulations of the CMC for soil drainage.** **2. Backfilling of excavations in trenches and pits for drains and manholes must be compacted and excess to be disposed as directed at expenses of the contractor. Rate to be included for dewatering, pumping,shoring and cleaning the site on completion.** **3.The gauge of pipes to be 600 UPVC.** **4. Rates shall be inclusive of bends, valves, reduces joints,end caps etc. necessary for the installation of service.**				
W.01	Excavate trench for pipe laying, pipe dia n.e. 150mm, average depth n.e.500 mm including back filling. (approx.)	100.00	m		
W.02	Supply & fix/lay 63 mm dia. UPVC Type 600 waste pipes. (approx.)	65.00	m		
W.04	Supply & fix/lay 40 mm dia. UPVC Type 600 waste pipes. (approx.)	90.00	m		
W.05	Supply & fix/lay 110mm dia. UPVC sewer pipes fixed complete with all necessary specials fixed to wall with PVC brackets and brass screws.	130.00	m		
W.06	110mm dia UPVC pipe laid on cement concrete haunching in Grade 15 concrete including all bends junctions and connecting to manhole. Rate to include excavation, backfilling and disposal of excess earth.	120.00	m		

ORIGINAL

87

Item	Description	Qty.	Unit	Rate Rs.	Amount Rs.
W.07	Construction of RCC manhole internal size of 600mmX450 mm & depth≤ 1200mm as per detail drawing. Rate to include for excavation, necessary formwork, lifting hooks and 20mm thick cement, sand rendering in 1:2 mix trowel smooth with neat grey cement to all internal surfaces, exposed external surfaces and forming channel with 1:6 benching. Including 75mm thick RCC cover slab reinforced wth 10mm dia tor steel at 150mm c/c both ways.	13	Nr.		
W.08	Construction of RCC Interceptor manhole internal size of 750mmX450 mm & depth ≤ 1200mm as per detail drawing. Rate to include for excavation, necessary formwork, lifting hooks and 20mm thick cement, sand rendering in 1:2 mix trowel smooth with neat grey cement to all internal surfaces, exposed external surfaces and forming channel with 1:6 benching.	01	Nr.		
W.09	Construction of gully internal size of 300mm x300mm & depth up to 450mm as per detail drawing. Rate to include for excavation, necessary formwork, lifting hooks, supplying P.V.C.gully trap in fill with grade 20 concrete and 20mm thick cement & sand rendering in 1:2 mix trowel smooth with neat grey cement to all internal surfaces , exposed external surfaces and forming channel with 1:6 benching. Including 75mm thick RCC cover slab reinforced wth 6mm dia mild steel at 100mm c/c both ways.	13	Nr.		
W.10	Allow for connection to main sewer line .Rate to be included for breking the road surface & reinstate temporary after laying the lines as directed. **STROM WATER** **Note:** **All storm water pipes to be type 400 to SLS.**		Prosum		300,000.00

ORIGINAL

86

Item	Description	Qty.	Unit	Rate Rs.	Amount Rs.
W. 11	Construction of storm water brick manhole internal size 450mm x 450mm (ave.depth 600mm) consists of 100mm thick Grade 15 concrete base, 225mm thick brick side walls, 75mm thick Grade 20 concrete cover slab with 10mm dia high-yield steel bar at 125mm c/c both ways. Rate include for excavation, necessary formwork, lifting hooks and 12mm thick cement and sand rendering in 1:3 mix trowel smooth with neat grey cement to all internal surfaces and external exposed surfaces and including forming channels.	12	Nr.		
W.12	Construction of brick Interceptor manhole internal size 450mm x 450mm (ave.depth 600mm) consists of 100mm thick Grade 15 concrete base, 225mm thick brick side walls, 75mm thick Grade 20 concrete cover slab with 10mm dia high-yield steel bar at 125mm c/c both ways. Rate include for excavation, necessary formwork, lifting hooks and 12mm thick cement and sand rendering in 1:3 mix trowel smooth with neat grey cement to all internal surfaces and external exposed surfaces and including forming channels.	01	Nr.		
W.13	110mm dia UPVC pipe laid on cement concrete haunching in Grade 15 including all bends junctions and connecting to manhole. Rate to include excavation, backfilling and disposal of excess earth.	125.00	Lm		
W.14	Allow for connecting to storm water line.Rate to be included for breking the road surface & reinstate temporary after laying the lines as directed.		Prosum		250,000.00
	Total carried over to summary				
	BILL NO X **EXTERNAL WORKS**				
	Name Boards				
X.01	Allow for supplying ,fabricating and fixing of 25 mm thick stainless steel box type & mat finished 250mm high letters in three languages fixed on to the front wall with necessary accessories, as per given detail.(job No.2017/14, sheet No.04/10).		Item		

ORIGINAL

85

Item	Description	Qty.	Unit	Rate Rs.	Amount Rs.
X.02	Allow for supplying fabricating,and fixing stainless steel CMC Logo fixed on to the front wall with necessary accessories, as per given detailed drawing. (Logo Hight - 1500mm).(job No.2017/14, sheet No.04/10)		Item		
X.03	Supplying and fixing plastic gang chair fix on to steel base with necessary accessories as per Engineer detail .(Approx..)	456.00	Nr.		
	Fire system 1. Equipment shall be European or Japanese made 2. Total system shall be under comprehensive warranty of 1 year from the date of handovering 3. Shall strictly Follow the attached specifications and Drawings 4. All the items shall be proir approved by the Colombo Fire Service Department 5. Contractor shall have 10 years previous experience in similar capacity of this project and supporting documents shall be attached				
X.04	Supplying and installing fire alarm control panel of reputed manufacturer. The alarm panal shall operate on a 24 VDC circuit incorporating standby batteries. Conform to B.S.5839	1	Nrs		
X.05	Suppling & Installing photo electric type smoke detectors interchangeble standard locking bases of reputed manufacturer	12	Nrs		
X.06	Suppling and Installing fixed high temperature type heat detectors locking bases of reputed manufacturer	6	Nrs		
X.07	Suppling and Installing surface type manual call points of reputed manufacturer	4	Nrs		
X.08	Suppling and Installing 24 VDC alarm electronic sounder of reputed manufacturer	4	Nrs		
X.09	Wiring for detectors, manual call points and alarm bells to control panel in fire rated cables or PVC sheated cables of 1.5mm sq insterted in steel conduting.	400	m		

ORIGINAL

84

Item	Description	Qty.	Unit	Rate Rs.	Amount Rs.
	EXIT SIGNS				
X.10	Suppling and Installing photoluminescent type exit Signs.Conform to B.S.5266	8	Nrs		
	EMERGENCY LIGHTING				
X.11	Suppling and Installing 03 Nos. of maintained type emergency lighing (for circulation ares in the nuilding) .Lighting level not less than 0.2 lux. Backup duration shall not be less than 03 hrs.	8	Nrs		
	FIRST AID FIRE EXTINGUISHER **Suppling and Installing of first aid fire extinguishers of following types**				
X.12	9L Water type fire extinguisher	5	Nrs		
X.13	2Kg CO2 fire extinguishers	6	Nrs		
	FIRE SUPPRESSION SYSTEM				
X.14	Suppling and Installing 02 Nos first aid fire hose reel 30m of PVC, reinforced hose jet and spray nozzle of reputed manufacturer. Conform to B.S.5274	2	Nrs		
X.15	Supply and laying 100mm BS 1387 heavy duty G.I. piping system from pump room, hose reels with necessary brackets & fittings and pipeline painted with 02 coats of approved paints(anti corrosive)	30	m		
X.16	Supply and laying 50mm BS 1387 heavy duty G.I. piping system from pump room, hose reels with necessary brackets & fittings and pipeline painted with 02 coats of approved paints(anti corrosive)	20	m		
X.17	Supply and install Fire Pump with capacity of 1500 liters/minute for the building with all necessory accessories.	2	Nrs		
X.18	Supplying and Installing electrical switch gear maintained in dust and moisture proof cabinet auto / manual selector switchs push button starter switch, phase indicating lights internal wiring from pumps to starter.	2	Nrs		

ORIGINAL

Item	Description	Qty.	Unit	Rate Rs.	Amount Rs.
X.19	Supplying and installing the cabling for taking the ceb mains power supply for the fire panel. Cost shall include proper laying method	20	m		
X.20	Suppling and Installing necessary non- return and gate valves for two nos. of fire pumps foot valves, pressure control switches and pressure gauges.	1	Nrs		
X.21	Testing and commissioning. Shall be done in presence and approved by the Colombo Fire Service Department	1	Item		
	Total carried over to summary				-

ORIGINAL

BILL OF QUANTITIES FOR PROPOSED PAVILION AT COOREY PLAYGROUND, WELLAWATTA.

BILL NO	DESCRIPTION	AMOUNT RS.
Bill No 01	PRELIMINARIES	
Bill No 02	PILING WORK	
BILL NO C	DEMOLISHER	
BILL NO. D	EXCAVATION AND EARTH WORK	
BILL NO. F	CONCRETE WORK	
BILL NO. G	MASONRY WORKS	
BILL NO. H	WATER PROOFING	
BILL NO. J	STRUCTURAL METAL WORK	
BILL NO. K	METAL WORK	
BILL NO. L	WOOD WORK	
BILL NO. M	CLADDING	
BILL NO. P	ROOF AND ROOF PLUMBING	
BILL NO. Q	PLUMBING AND SANITARY INSTALLATIONS	
BILL NO. S	ELECTRICAL INSTALLATION	
BILL NO. T	FLOOR AND WALL FINISHES	
BILL NO. V	PAINTING	
BILL NO. W	DRAINAGE SYSTEMS	
BILL NO. X	EXTERNAL WORKS	
	SUB TOTAL	
	ADD 10% CONTINGENCIES	
	TENDER PRICE (BID PRICE)	
	ADD 8% VAT	
	FINAL COST (WITH TAXES)	

SIGNATURE OF TENDERER: .....

DATE: .....

ORIGINAL

SECTION 9

SCHEDULES

ORIGINAL

Schedule 1 – General Information

(i) If pre-qualification is done the bidders are required to include information subsequent to that submitted with the pre-qualification application.

(ii) For joint ventures, each joint venture partner shall furnish information separately.

ITB Clause reference	Description	Information *(to be filled by the Bidder)*	Remarks
4.1 (a)	**Legal Status**		*Provide certified copies of Registration*
	Written power of attorney of the signatory to the Bid	*Provide original or certified copy of the power of attorney attested by a Notary and label as attachment to Clause 4.1(a)*	
	If a Joint Venture, names and addresses of Joint Venture Partners	1. …… 2. …….. 3. ……	*Provide a draft copy of the Joint Venture Agreement or alternatively the memorandum of understanding*
	If a Joint Venture, name of Lead Partner		
	For joint ventures, each joint venture partner shall furnish Legal Status separately		
	Name (Lead partner)		*Provide certified copies and label as attachment to Clause 4.1(a)*
	Legal status		
	Place of registration		
	Principle place of business		
	Written power of attorney of the signatory to the Bid	*Provide original or certified copy of the power of attorney attested by a Notary and label as attachment to Clause 5.1*	
	VAT Registration Number		
	Name (Partner 2)		*Provide certified copies and label as attachment to Clause 4.1 (a)*
	Legal status		
	Place of registration		
	Principle place of business		
	Written power of attorney of the signatory to the Bid	*Provide original or certified copy of the power of attorney attested by a Notary and label as attachment to Clause 4.1 (a)*	

	VAT Registration Number		
	Name (Partner 3)		*Provide certified copies and label as attachment to Clause 4.1 (a)*
	Legal status		
	Place of registration		
	Principle place of business		
	Written power of attorney of the signatory to the Bid	*Provide original or certified copy of the power of attorney attested by a Notary and label as attachment to Clause 4.1 (a)*	
	VAT Registration Number		
4.2 (a)	**ICTAD Registration**		*Provide certified copies and label as attachment to Clause 4.2(a)*
	Registration number		
	Grade		
	Specialty		
	Expiry Date		

ORIGINAL

ORIGINAL

Schedule 2 – Annual Turn-over Information
(Construction only – Last five years)

(i) If pre-qualification is done the bidders are required to include information subsequent to that submitted with the pre-qualification application.

(ii) For joint ventures, each joint venture partner shall furnish information separately.

Year	Turn-over	Remarks
1		*Attach audited reports and label as attachment to Clause 4.2*
2		
3		
4		
5		

Schedule 3 – Adequacy of Working Capital

If pre-qualification is done the bidders are required to include information subsequent to that submitted with the pre-qualification application

Source of credit line	Amount	Remarks
		Provide documentary evidence and label as attachment to Clause 4.2
Total		

ORIGINAL

Schedule 4 – Construction Experience in last five years

(i) If pre-qualification is done the bidders are required to include information subsequent to that submitted with the pre-qualification application.

(ii) For joint ventures, each joint venture partner shall furnish information separately.

Year	Employer	Description of Works	Amount	Contractor's Responsibility (%)
		Total		

ORIGINAL

Schedule 5 – Major Items of Construction Equipment Proposed	
Type	**Capacity**

Schedule 6 – Construction Management Staff

A. Key Professionals

Name	Position	Task

B. Support Staff

Name	Position	Task

ORIGINAL

Schedule 7 – Time Schedule for Key Staff

			Months (in the form of a Bar Chart)															
Name	**Position**	**Activities**	**1**	**2**	**3**	**4**	**5**	**6**	**7**	**8**	**9**	**10**	**11**	**12**	**13**	**14**	**15**	**Number of Months**

Schedule 8 – Work Programme

Sheet 1 of ……

	[1st, 2nd, etc. are months from the Start Date.]														
Construction Activity	1st	2nd	3rd	4th	5th	6th	7th	8th	9th	10th	11th	12th	13th	14th	15th

ORIGINAL

Schedule 9 – Input percentages for Price Adjustment Formula (not applicable for this contract)		
Input Name (Include major materials below the list, together with percentages for all inputs)	**ICTAD Reference for Indices**	**Percentage** *(percentages listed should added to 90.0)*
Major plant	P1	
Small equipment	P2	
Skilled Labour	L1	
Unskilled Labour	L2	
	Total	**90.0**

ORIGINAL

Section 10

Drawings

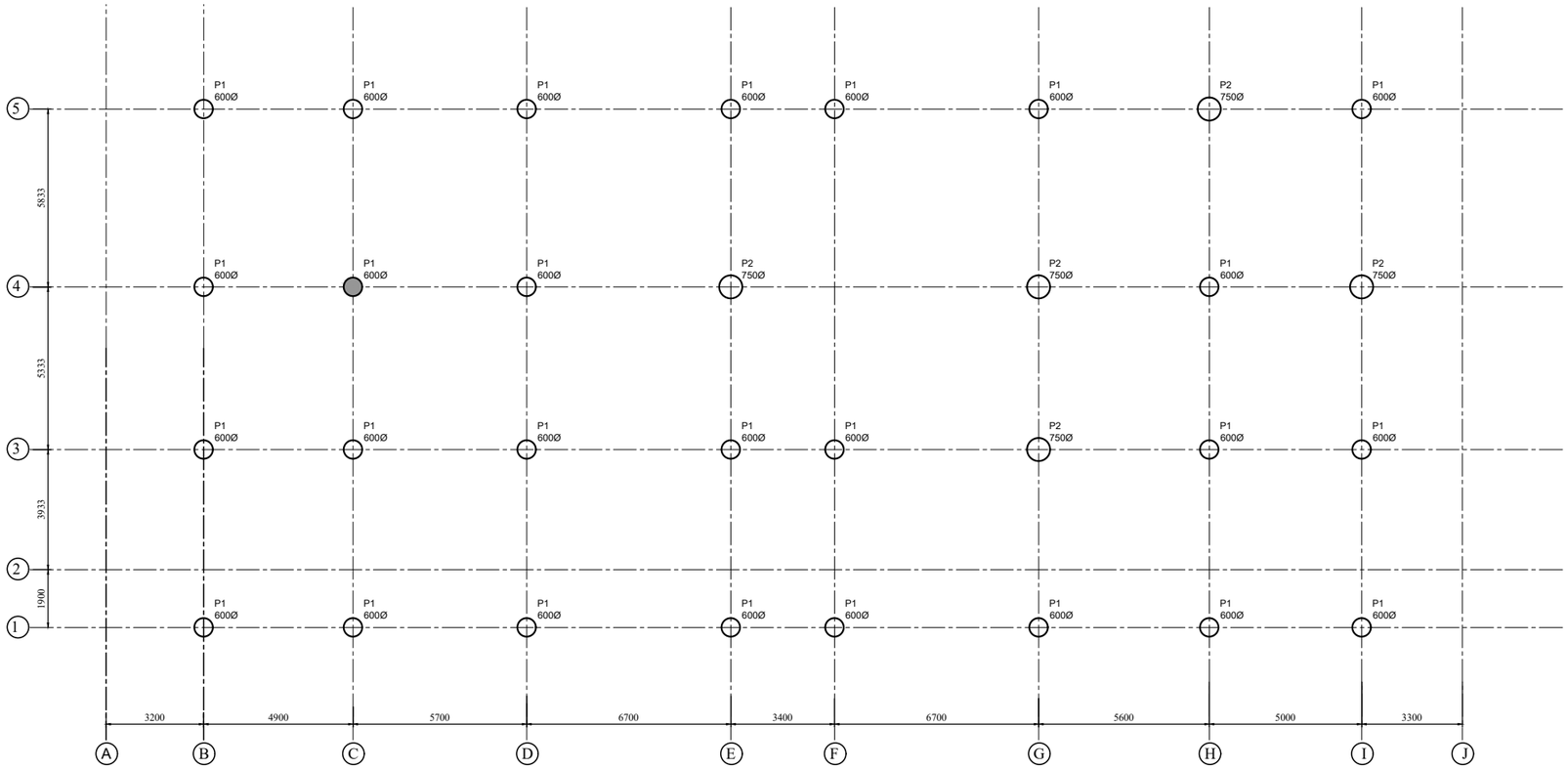

LAYOUT OF PILES

SCALE 1:100

NOTE :

PILE CUT OFF LEVELS:
Ø 750 PILE - 1.2m BELOW EXISTING GROUND LEVEL
Ø 600 PILE - 0.9m BELOW EXISTING GROUND LEVEL

NOTE

1. THIS DRAWING SHALL BE READ IN CONJUNCTION WITH RELEVANT ARCHITECTURAL DRAWINGS AND STRUCTURAL DRAWINGS.
2. THE CONTRACTOR SHALL VERIFY ALL DIMENSIONS ON SITE AND RESOLVE ALL DISCREPANCIES ,IF ANY , WITH THE ARCHITECT / ENGINEER BEFORE COMMENCEMENT OF WORK
3. ALL DIMENSIONS ARE IN MILLIMETERS AND LEVELS ARE IN METERS UNLESS OTHERWISE STATED.
4. A COPY OF PILE SETTING OUT PLAN SHALL BE SUBMITTED BY THE CONTRACTOR TO THE ENGINEER PRIOR TO COMMENCEMENT OF WORKS.THIS DRAWING SHALL BE PREPARED BY A LICENSED SURVEYOR.
5. THE CONTRACTOR IS REQUIRED TO SUBMIT TRIAL MIX OF THE CONCRETE FOR THE ENGINEER'S APPROVAL PRIOR TO THE INSTALLATION OF PILES.
6. ALL TEMPORARY WORKS NECESSARY FOR THE SUCCESSFUL INSTALLATION OF THE PILE SHALL BE DEEMED TO BE INCLUSIVE IN THE CONTRACT.
7. REFER ICTAD/DEV/16 SPECIFICATIONS FOR BARED AND CAST IN-SITU REINFORCED CONCRETE PILES BY THE INSTITUTE FOR CIDA AND OTHER SPECIFICATIONS FOR THE CONSTRUCTION AND TESTING OF PILES.
8. REINFORCEMENT SHALL BE INSPECTED AND APPROVED BY THE CONSULTING ENGINEER BEFORE CONCRETING.
9. MINIMUM LAP AND ANCHORAGE LENGTH IN REINFORCEMENT TO BE 52X SMALLER BAR DIAMETER.
10. PILE CUT OFF LEVEL TO BE 75 mm ABOVE THE PILE CAP BOTTOM LEVEL.
11. MINIMUM COVER TO STEEL REINFORCEMENT IN PILES SHOULD BE 75mm .COVER BLOCKS SHOULD BE PRODUCED USING GRADE 35 CONCRETE AND MAX. AGGREGATE SIZE 10mm .
12. CONCRETE GRADE C30 & TYPE OF CEMENT SHALL BE PPC OR SULPHUR RESISTANCE CEMENT.
13. TYPE OF REINFORCEMENT - YIELD STRENGTH Fy = 500 N/mm²
14. REINFORCEMENT OF PILES SHOULD EXTEND BEYOND THE PILE CUT OFF LEVEL A MINIMUM LENGTH OF 52Ø OF MAIN BARS TO BE ANCHORED INTO THE PILE CAP.
15. EACH PILE SHOULD BE CONCRETED AND ADEQUATE LENGTH ABOVE THE PILE CUT OFF LEVEL TO ALLOW FOR SUMP AND WEAK CONCRETE WITH LAITANCE AT THE TOP SO THAT AT CUT OFF POINT SOUND CONCRETE OF THE SPECIFIED STRENGTH IS OBTAINED.
16. THE DATUM LEVEL WILL BE GIVEN BY THE ENGINEER AT THE SITE.
17. ALL PILES SHOULD BE DRIVEN TO THE HARD BASEMENT ROCK AND SOCKETED 1500mm INTO THE ROCK UNLESS OTHERWISE INSTRUCTED BY THE ENGINEER.(APPROXIMATE PILE LENGTH 28m.
18. INTEGRITY TEST TO BE CARRIED OUT FOR ALL PILES . IF INTEGRITY TEST FAIL IN ANY PILES. CONTRACTOR HAS TO PROVE THE ADEQUACY OF PILE CAPACITY BY LOAD TEST.
19. A FAILED PILE HAS TO BE COMPENSATED BY A NEW PILE.COMPENSATION PILES SHALL BE AT THE CONTRACTORS COST.
20. TOTAL NUMBER OF PILES

PILE DIAMETER (mm)	NUMBER OF PILES
600	26
750	05
TOTAL	31

21. PILE CENTER SHALL NOT BE DEVIATED MORE THAN 75 mm IN ANY DIRECTION . (REFER SPECIFICATION & CIDA SPECS).
22. CONTRACTOR SHALL BE THROUGH WITH SOIL REPORT , PREVIOUS BORING SHEETS & ETC.
23. CONTRACTOR TO MAINTAIN & SUBMIT THE FOLLOWING MINIMUM DOCUMENTS TO THE SITE REPRESENTATIVE OF ENGINEER.
    i QA/QC CHECK SHEET SIGNED BY QA/QC MANAGER.
    ii PILE BORING RECORD
    iii PILE CONCRETE RECORD , TRUCK MIXER RECORD & TEST CUBE RECORDS
    iv PILE RECORD CONCRETING STAGE
24. THE PILING SEQUENCE SHALL BE SO SEQUENCED CONSIDERING THAT ,NO TWO PILES WITHIN A RADIUS OF 10mm ARE INSTALLED WITHIN 48 HOURS.
24. 600mm DIAMETER PILE MARKED FOR PDA TEST SHOULD BE CAST AND TESTED WITH PDA TEST FOR 2200kN AND REPORT SHOULD BE SUBMITTED WITHIN 16 DAYS BY REPUTED PILE TESTING AGENCY TO CHECK THE PERFORMANCE OF THE PILE FOR CONSIDERATION IN REVIEW OF THE PILE DIAMETER LAYOUT.
25. MATERIAL TESTING SHALL BE DONE AS PER CRITERIA GIVEN BY SLS 1114-1 AND ICTAD.
26. AS BUILT PILE COORDINATES SHOULD BE SUBMITTED SOON AFTER THE PILING WORK COMPLETION.

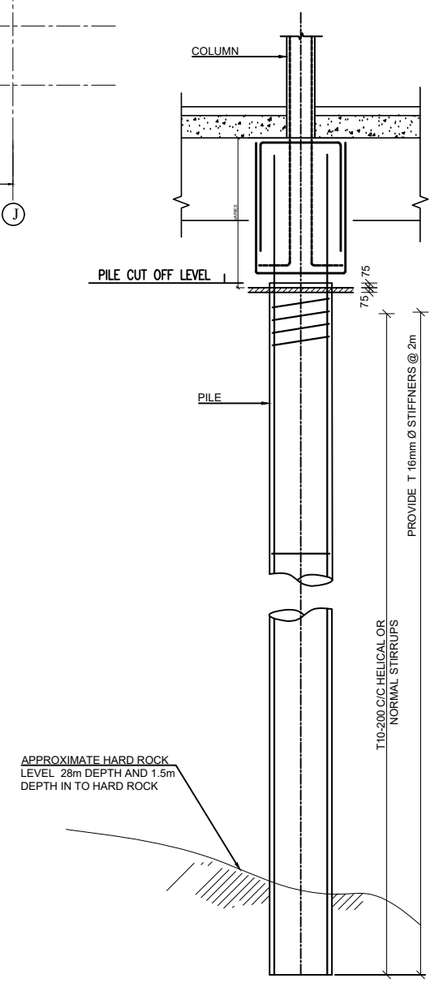

TYPICAL PILE ELEVATION

SCALE 1:50

PILE REINFORCEMENT

LEGEND	P1	P2
REINFORCEMENT	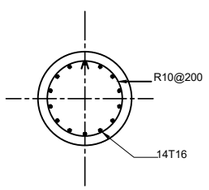 T12 STIFFNER BARS @ 2000 C/C	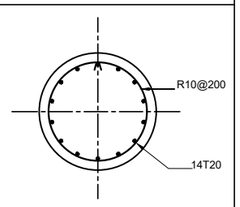 T12 STIFFNER BARS @ 2000 C/C
SIZE	600Ø	750Ø

ORIGINAL

PROPOSED PAVILION AT COOREY PLAYGROUND , WELLAWATTA

DESIGN OF PILES (TENDER DRAWINGS)

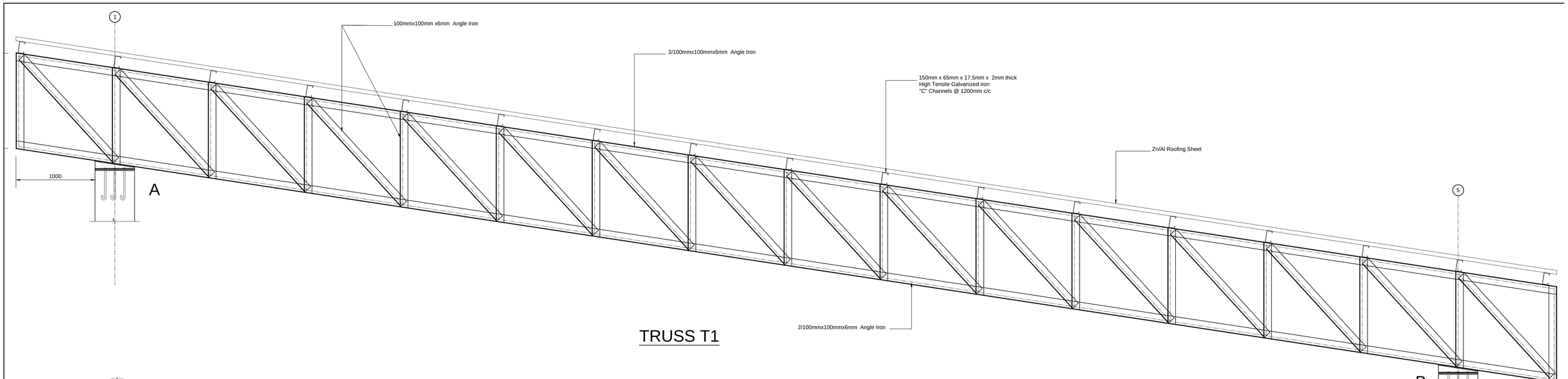

TRUSS T1

ORIGINAL

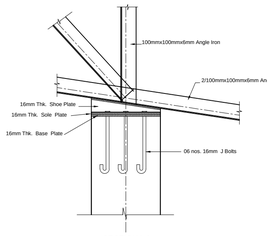

SECTION b-b

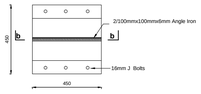

PLAN
FIXED END
DETAIL 'B'

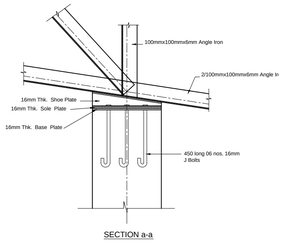

SECTION a-a

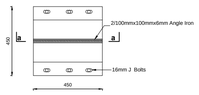

PLAN
ROLLER END
DETAIL 'A'

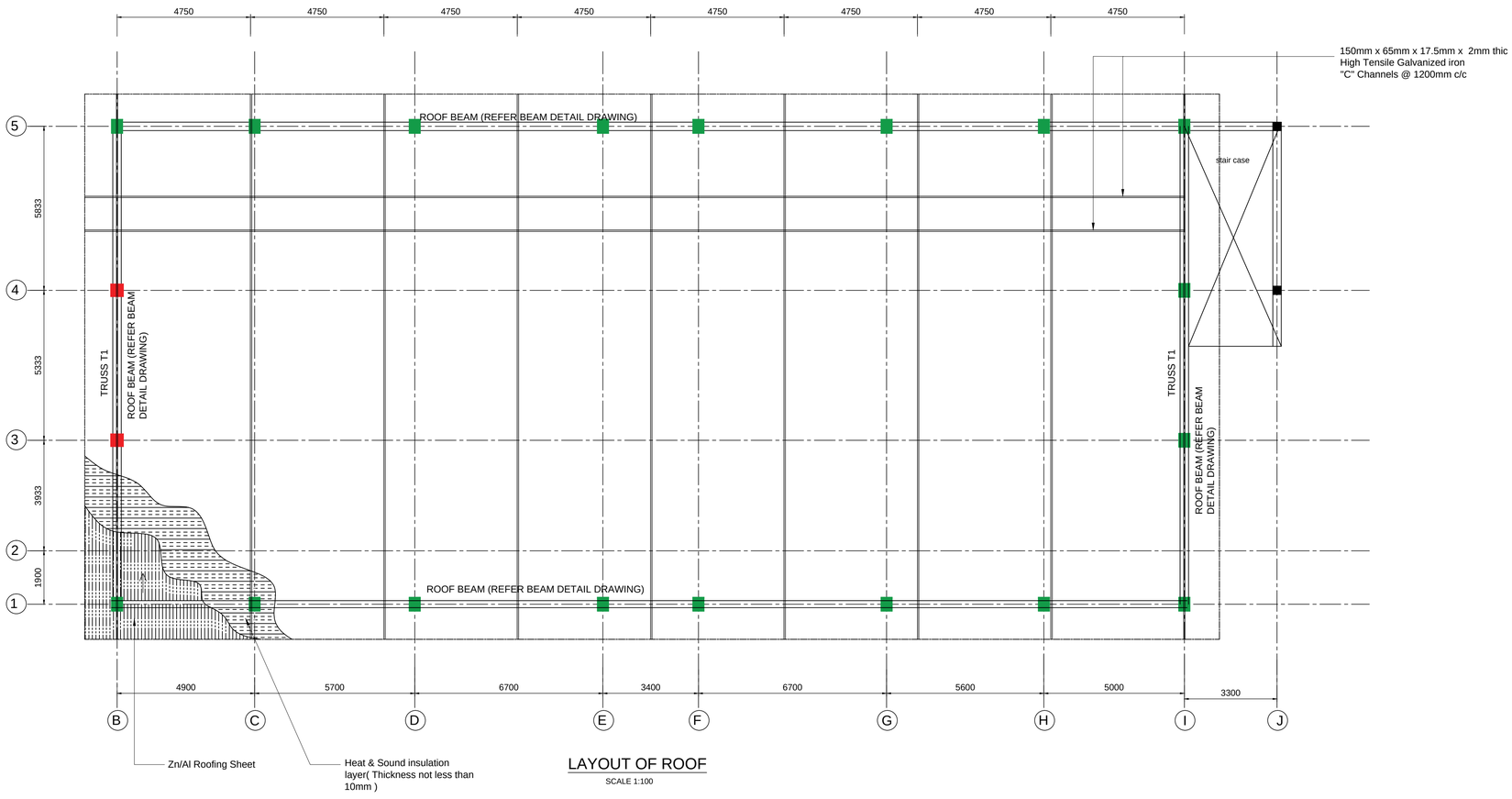

LAYOUT OF ROOF

SCALE 1:100

NOTE

1. ALL DIMENSIONS ARE IN MILIMETERS.
2. CHECK ALL DIMENSIONS OF SITE PRIOR TO CONSTRUCTION.
3. ALL STEEL SECTION TO BE GRADE 275 AND NUT & BOLT SHOULD BE GRADE 8.8
4. USE 10 mm. THICK GUSSET PLATE AT THE JOINTS.
5. MINIMUM WELDING LENGTH TO BE 100mm.
6. WELDING THICKNESS TO BE 6mm.
7. CANTILEVER 'C' CHANNEL FOR ENDS TO BE JOINT TO END SPANS 'C' CHANNEL WITH 6mm WELDDING JOINT THROUGH OUT THE SECTION AND AT THE DISTANCE OF $\frac{1}{4}$ OF THE SPAN AS PER THE DRAWING.

PROPOSED PAVILION AT COOREY PLAYGROUND , WELLAWATTA

DETAILS OF ROOF (TENDER DRAWINGS)

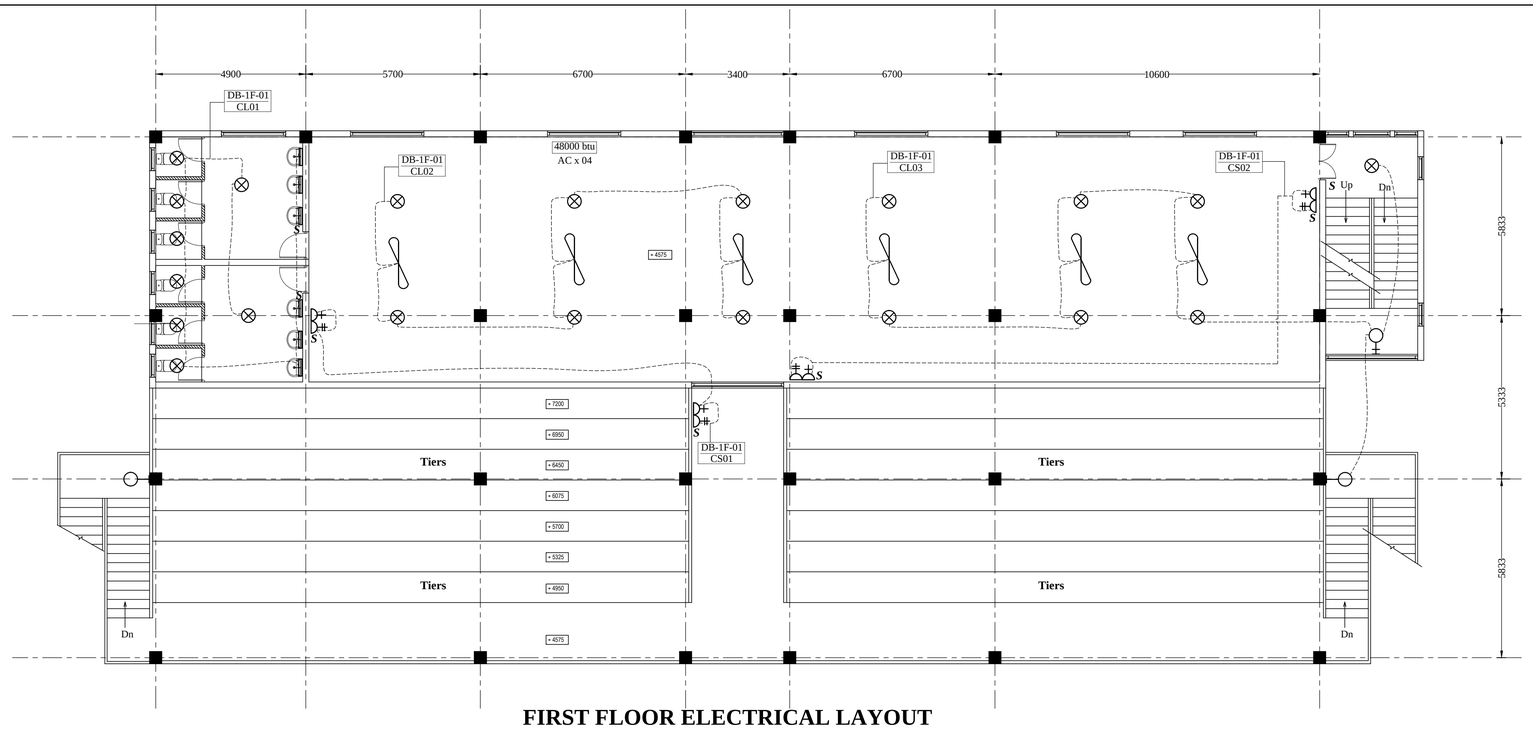

ORIGINAL

FIRST FLOOR ELECTRICAL LAYOUT

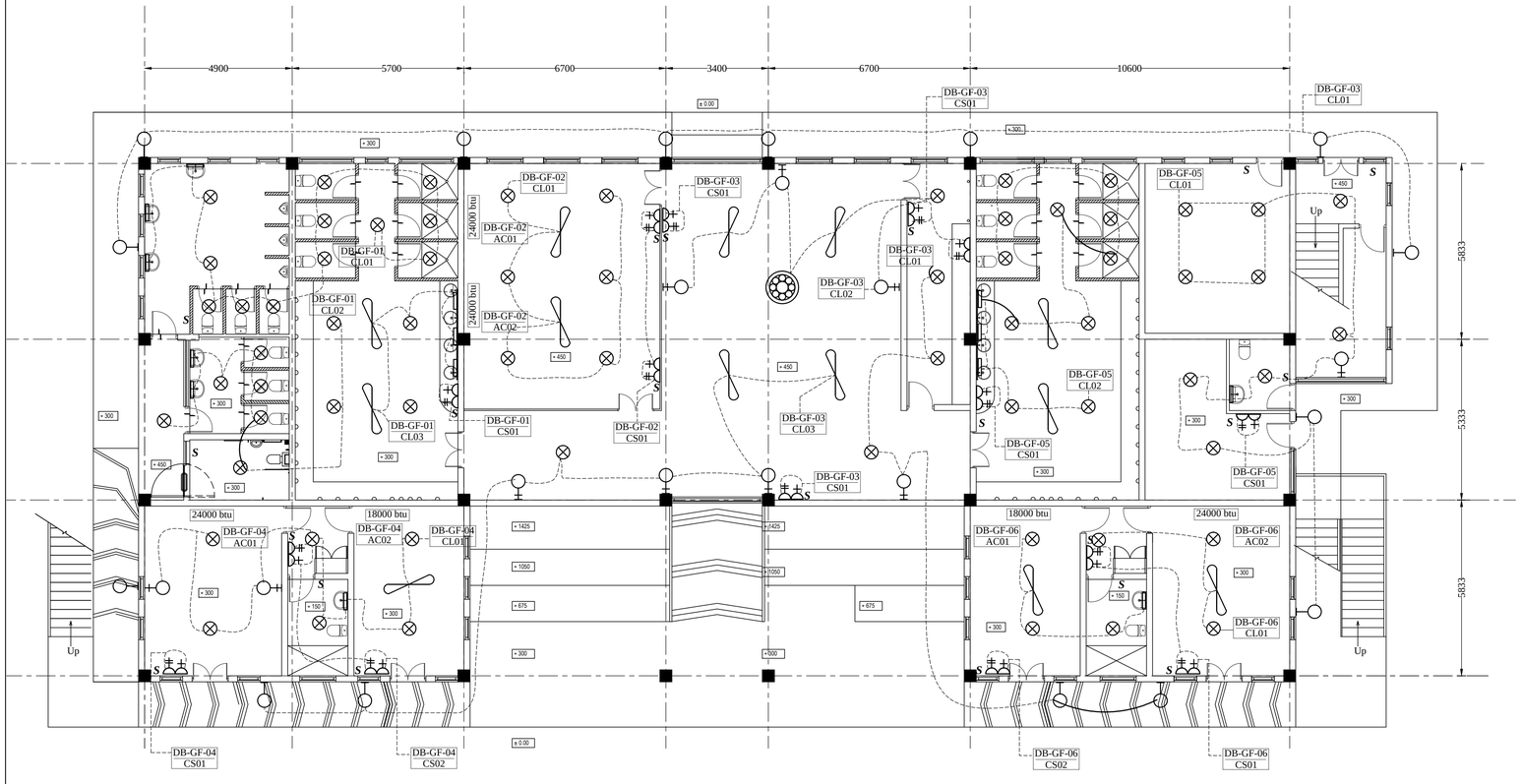

GROUND FLOOR ELECTRICAL LAYOUT

PROPOSED PAVILION AT COOREY PLAYGROUND , WELLAWATTA

WIRING LAYOUTS
GROUND FLOOR & FIRST FLOOR
(TENDER DRAWINGS)

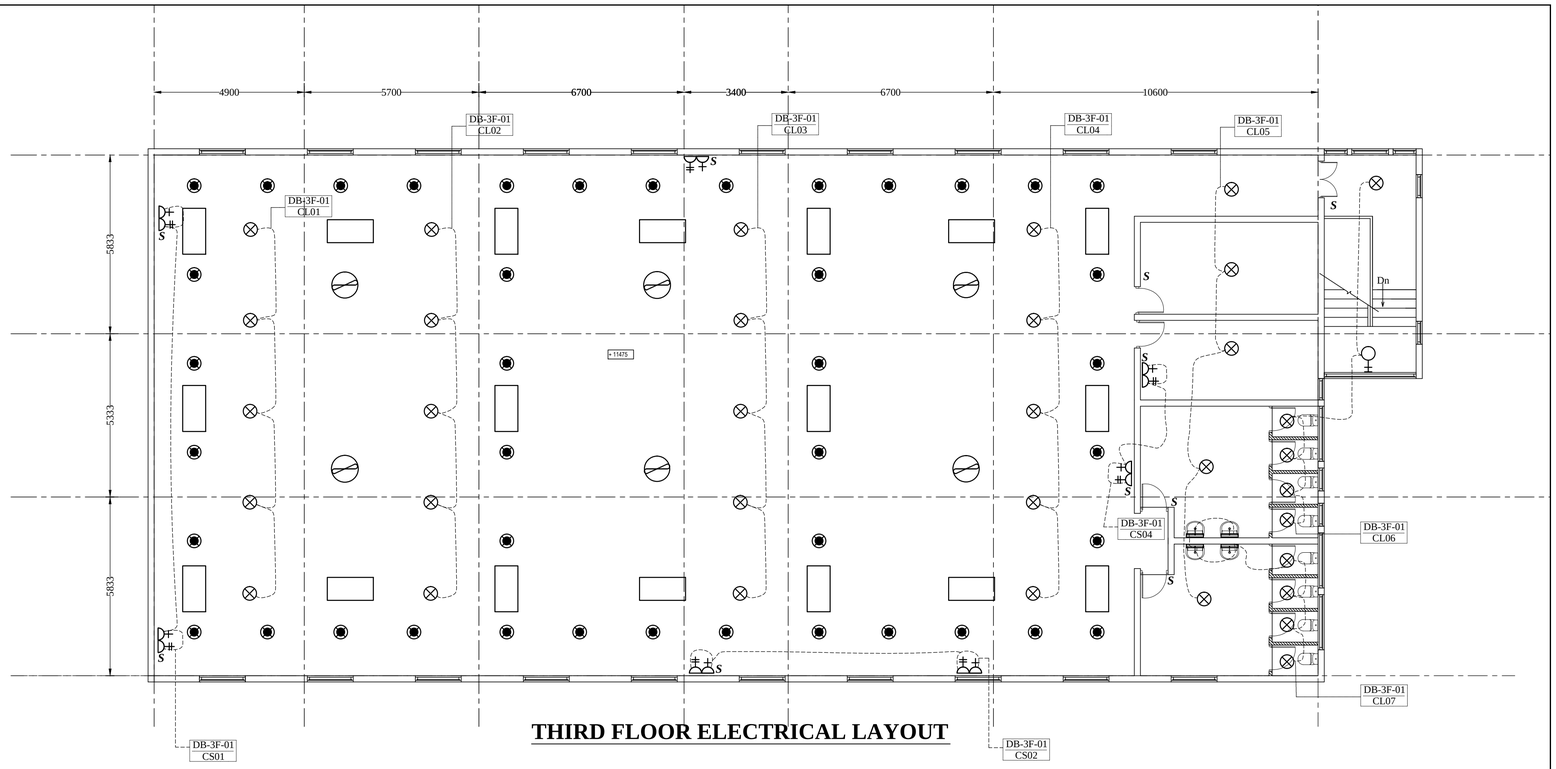

THIRD FLOOR ELECTRICAL LAYOUT

ORIGINAL

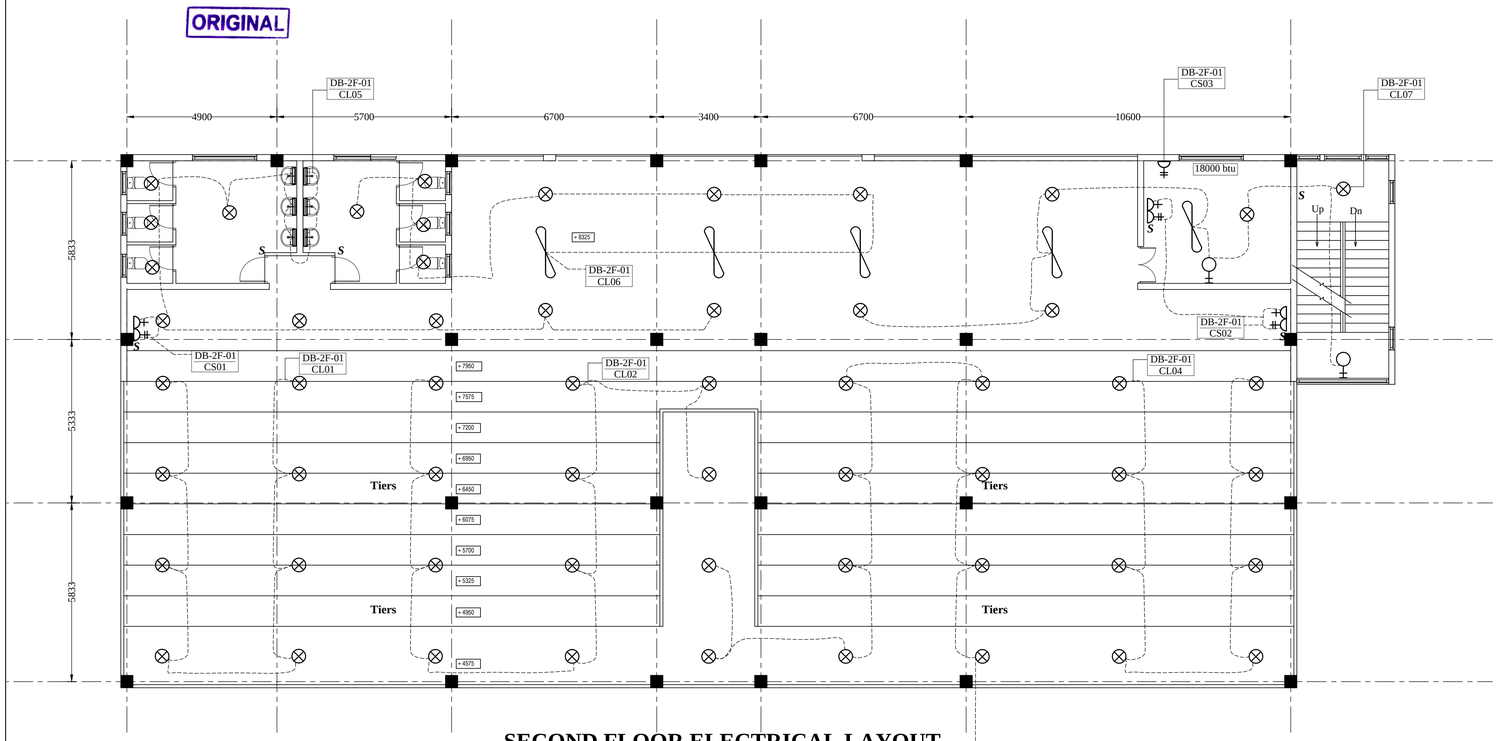

SECOND FLOOR ELECTRICAL LAYOUT

PROPOSED PAVILION AT COOREY PLAYGROUND , WELLAWATTA

WIRING LAYOUTS
SECOND FLOOR & THIRD FLOOR
(TENDER DRAWINGS)

ORIGINAL

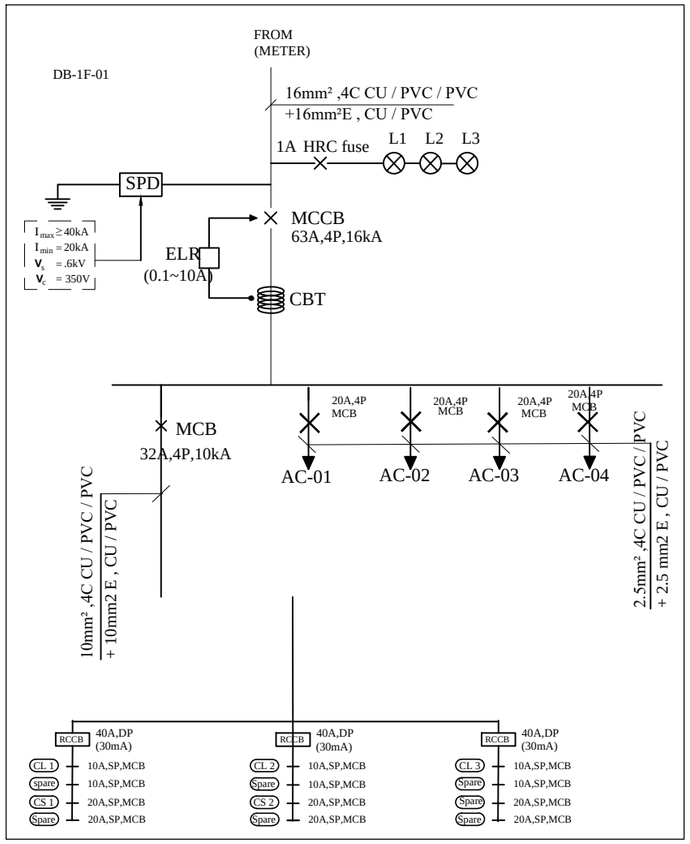

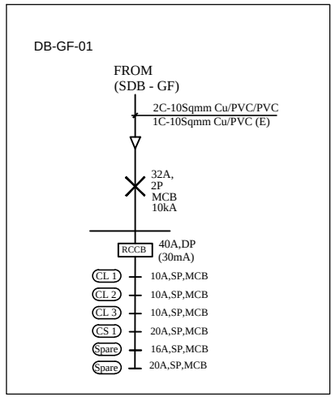

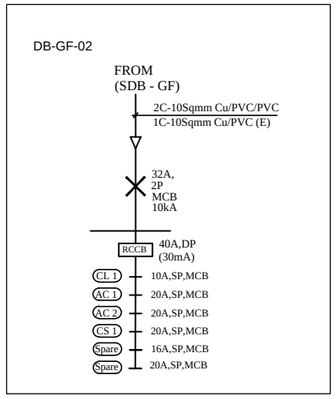

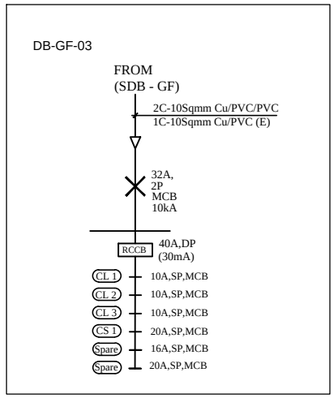

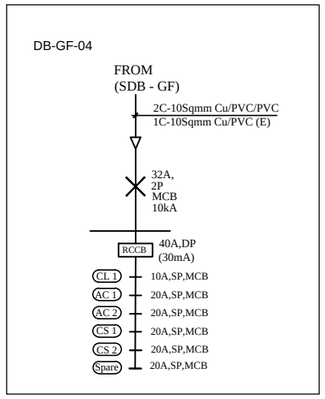

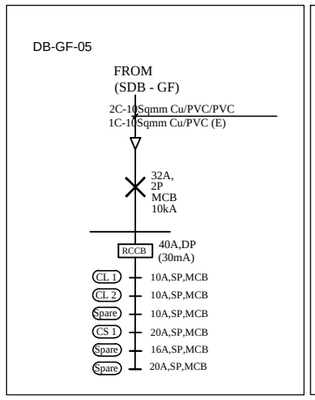

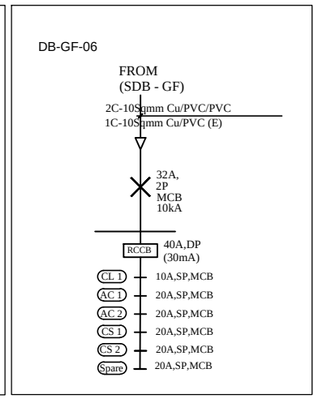

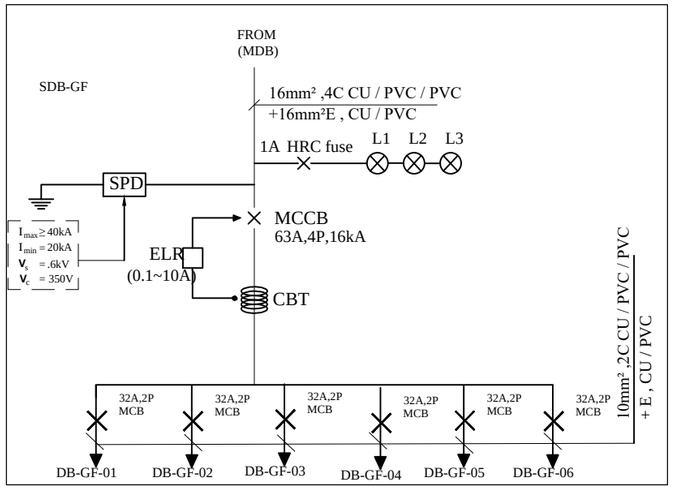

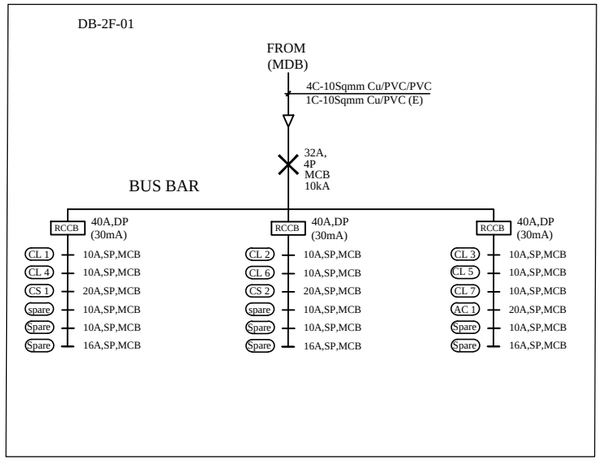

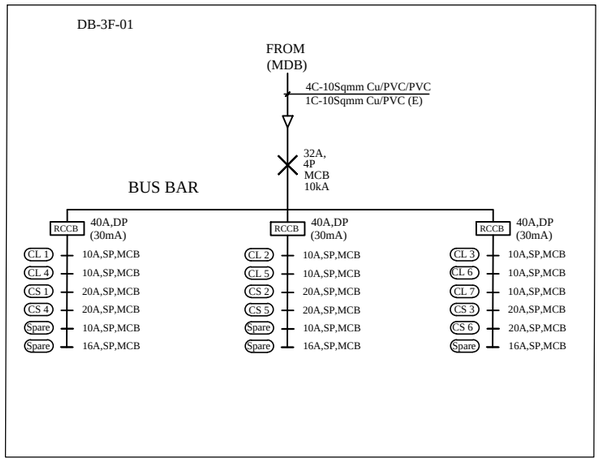

PROPOSED PAVILION AT COOREY PLAYGROUND , WELLAWATTA

SINGLE LINE DIAGRAMS (TENDER DRAWINGS)

MAIN DISTRIBUTION BOARD (MDB)

ORIGINAL

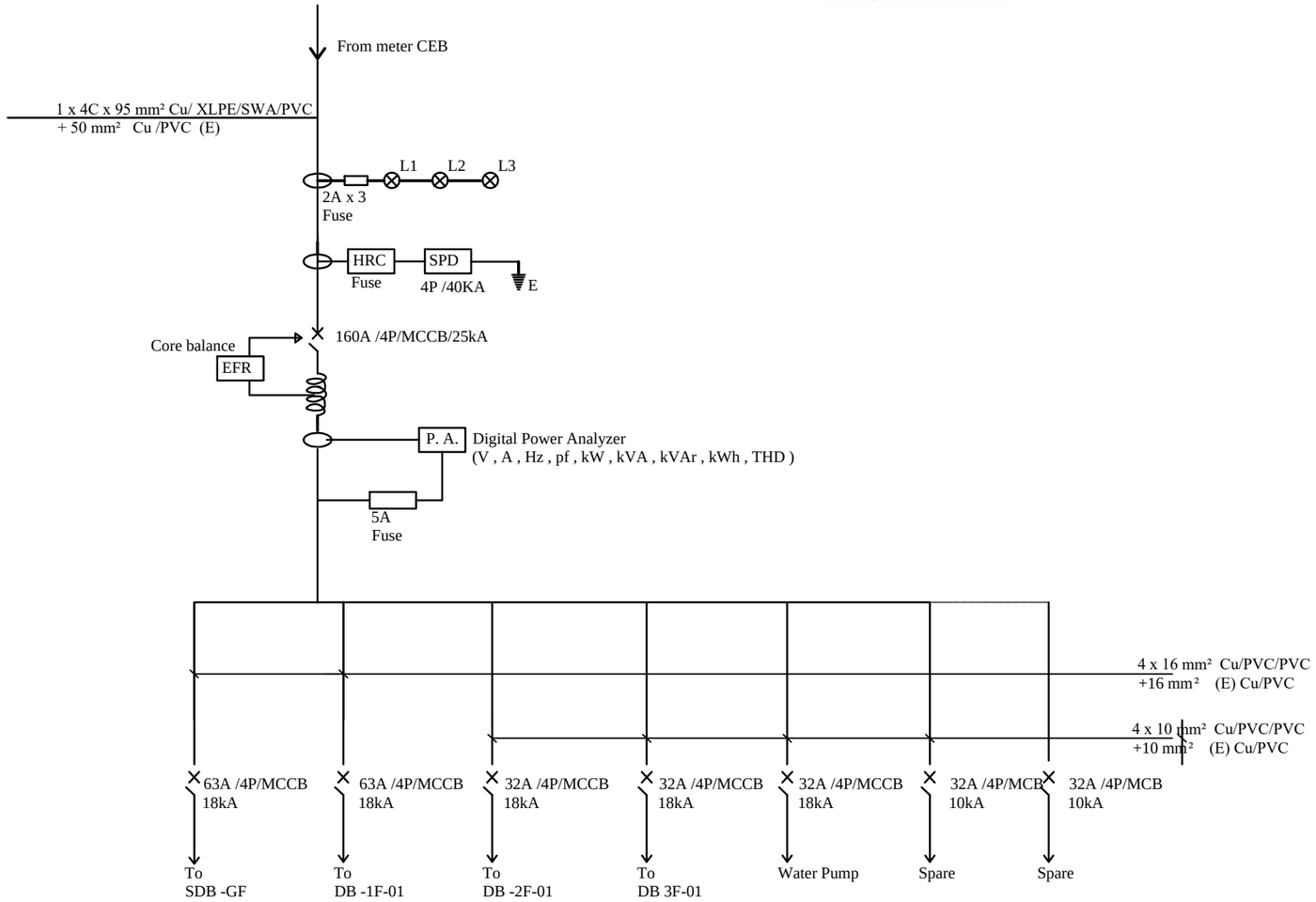

PROPOSED PAVILION AT COOREY PLAYGROUND , WELLAWATTA

SINGLE LINE DIAGRAMS (TENDER DRAWINGS)

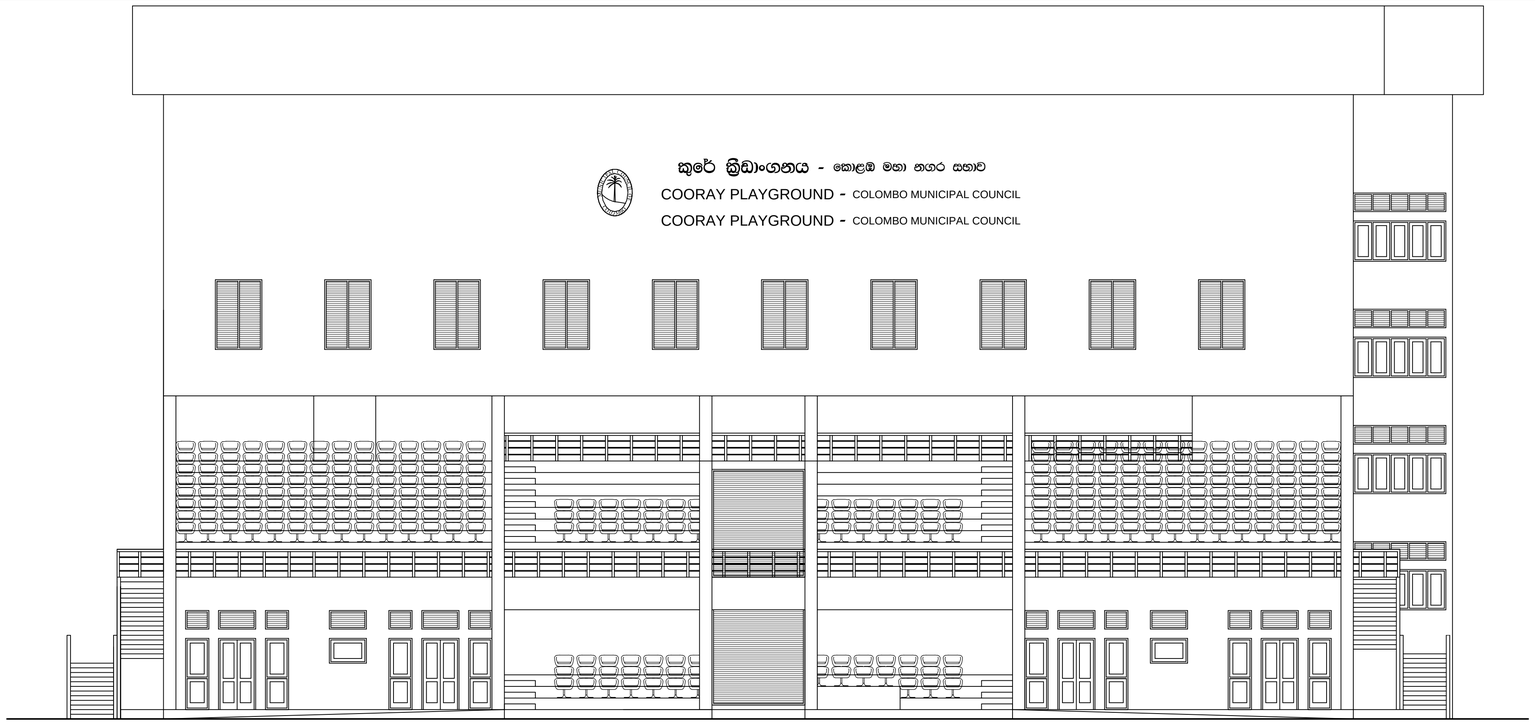

FRONT ELEVATION

ORIGINAL

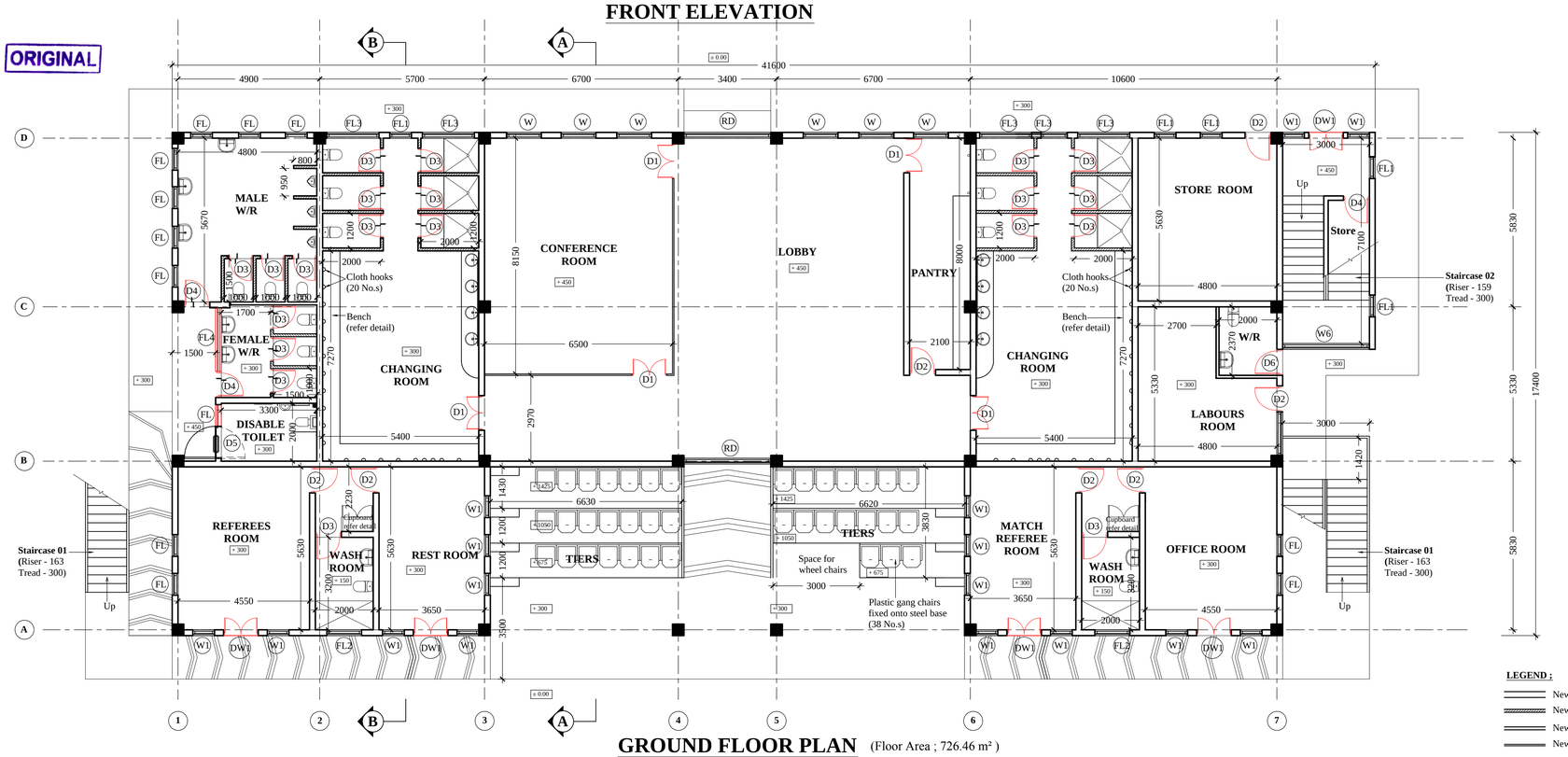

GROUND FLOOR PLAN (Floor Area ; 726.46 m²)

LEGEND ;

- New 200mm thick Block walls
- New 100mm thick Block walls upto 2100mm height
- New 100mm thick Block walls upto ceiling height
- New partitions upto ceiling height

NOTE

01.This drawing is a property of the Architectural unit of the M.E's Department.
02.This drawing shall not be copied or altered without the consent of the Architect.
03.This drawing must not be scaled.
04.If any discrepancy or error is detected in the drawing it should be immediately notice of the Architect.
05.This drawing should be read in conjunction with structural drawings & all service drawings and any other drawings referred to in here.
06.Any construction work carried out not in accordance with the information in the drawing will be rejected by the Architect.
07.All dimensions to be checked at site prior to the construction.
08. All Aluminium frames, sashes, panels to be powder coated, colour to be approved by the Architect.
09.All floor & wall tile samples to be approved by the Architect.
10.All internal walls to be finished with smooth plaster, skim coat & painted with two coats of Emulsion paint.
11.All external walls to be finished with rough plaster & painted with two coats of Weathershield paint.
12.Existing building structure to be demolished.
13.Rain water and waste water disposal system to Engineer's detail.
14.Sewerage and water supply system to Engineer's detail.
15. Electrical Layout to Electrical Engineer's detail.
16. Overhead water tank & sump capacity to Engineer's detail.

COLOMBO MUNICIPAL COUNCIL
MUNICIPAL ENGINEER'S DEPARTMENT

Job title

PROPOSED PAVILION AT COOREY PLAYGROUND , WELLAWATTA

Drawing title

COUNCIL DRAWING

PROJECT ARCHITECT	E.G.L.M.ELLUGATHANNE
PROJECT ENGINEER	W.M.I.P.KUMARA
SENIOR ARCHITECT	S.U.B.DOLAPIHILLA
CHIEF ARCHITECT	M.C.L.FERNANDO
DIRECTOR (Eng./ TDRS)	G.A.C.R.GANEPOLA
D.M.C.(Eng.services.)	Y.SYLVESTER

SCALE	DRAWN	CHECKED	Chavindu Senarathne
1:100	T.M.L.R.Thennakoon	D.O.A. ACT:	Chavindu Senarathne
JOB NO.	SHEET NO.	REVISION SUFFIX	
2017/14	01/10	DATE : 21-03-2021	

CLIENT DEPT./AUTHORIZED OFFICER'S NAME | DATE

CLIENT SIGNATURE | DESIGNATION

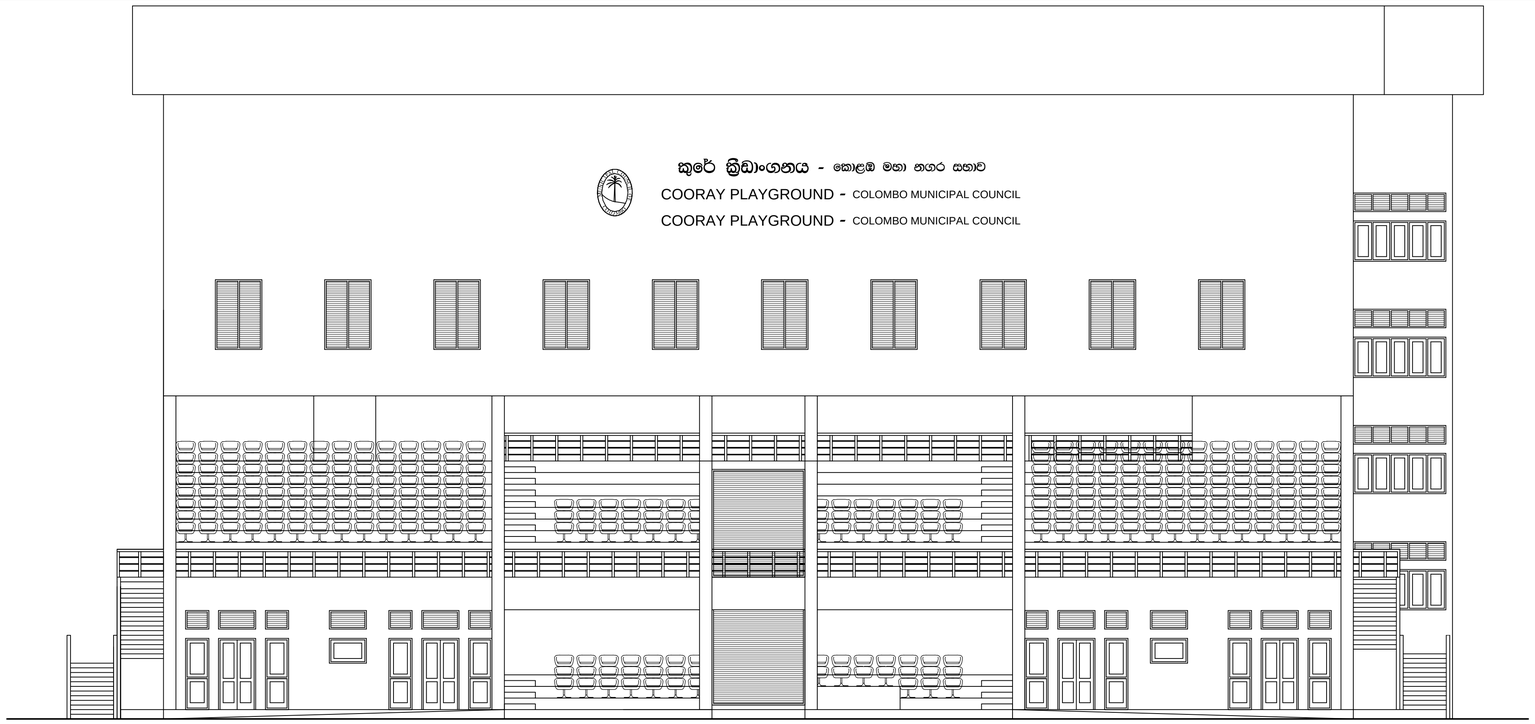

FRONT ELEVATION

ORIGINAL

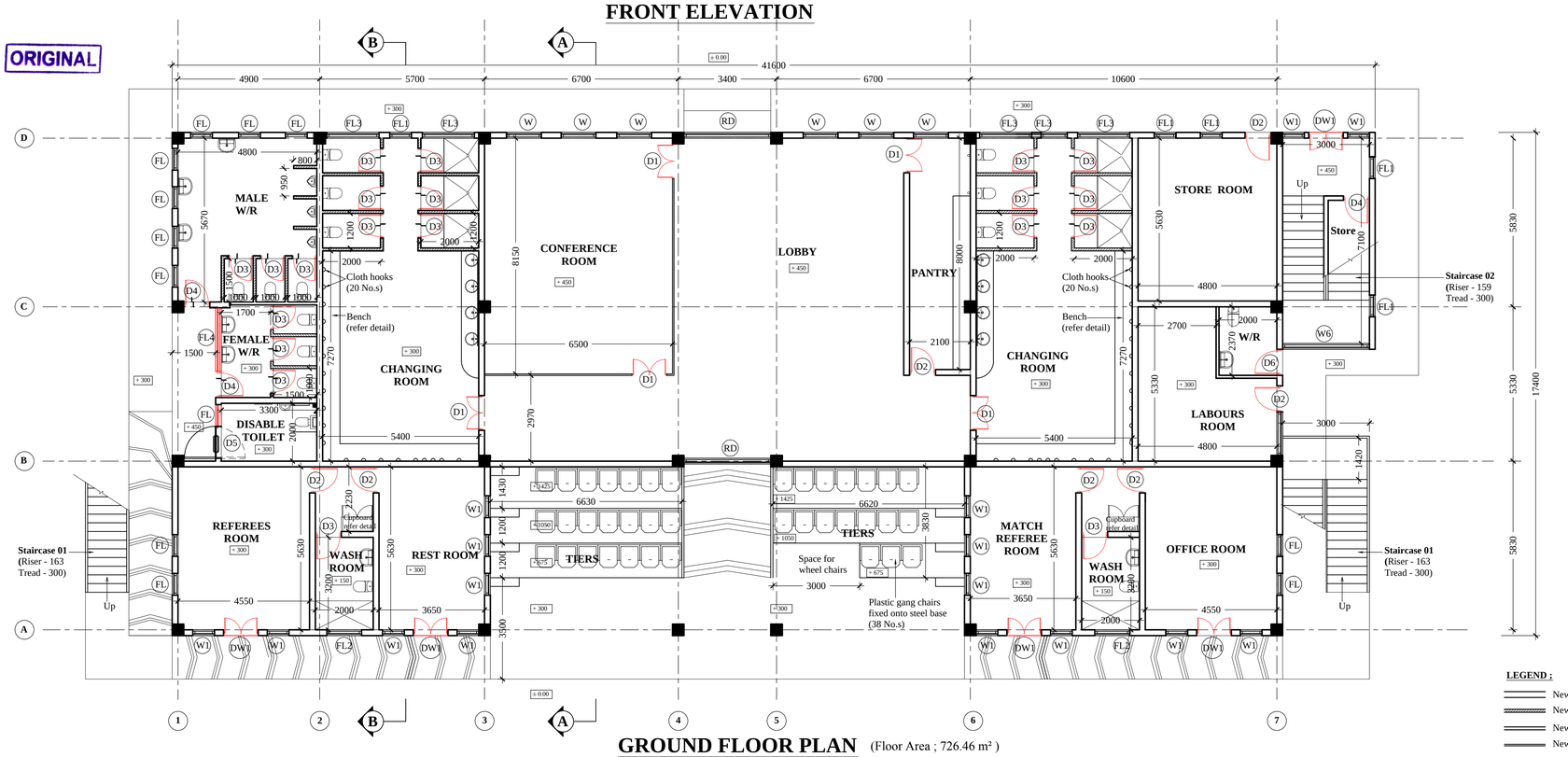

GROUND FLOOR PLAN (Floor Area ; 726.46 m²)

LEGEND ;

- New 200mm thick Block walls
- New 100mm thick Block walls upto 2100mm height
- New 100mm thick Block walls upto ceiling height
- New partitions upto ceiling height

NOTE

01.This drawing is a property of the Architectural unit of the M.E's Department.
02.This drawing shall not be copied or altered without the consent of the Architect.
03.This drawing must not be scaled.
04.If any discrepancy or error is detected in the drawing it should be immediately notice of the Architect.
05.This drawing should be read in conjunction with structural drawings & all service drawings and any other drawings referred to in here.
06.Any construction work carried out not in accordance with the information in the drawing will be rejected by the Architect.
07.All dimensions to be checked at site prior to the construction.
08. All Aluminium frames, sashes, panels to be powder coated, colour to be approved by the Architect.
09.All floor & wall tile samples to be approved by the Architect.
10.All internal walls to be finished with smooth plaster, skim coat & painted with two coats of Emulsion paint.
11.All external walls to be finished with rough plaster & painted with two coats of Weathershield paint.
12.Existing building structure to be demolished.
13.Rain water and waste water disposal system to Engineer's detail.
14.Sewerage and water supply system to Engineer's detail.
15. Electrical Layout to Electrical Engineer's detail.
16. Overhead water tank & sump capacity to Engineer's detail.

COLOMBO MUNICIPAL COUNCIL
MUNICIPAL ENGINEER'S DEPARTMENT

Job title

PROPOSED PAVILION AT COOREY PLAYGROUND , WELLAWATTA

Drawing title

COUNCIL DRAWING

PROJECT ARCHITECT	E.G.L.M.ELLUGATHANNE
PROJECT ENGINEER	W.M.I.P.KUMARA
SENIOR ARCHITECT	S.U.B.DOLAPIHILLA
CHIEF ARCHITECT	M.C.L.FERNANDO
DIRECTOR (Eng./ TDRS)	G.A.C.R.GANEPOLA
D.M.C.(Eng.services.)	Y.SYLVESTER

SCALE	DRAWN	CHECKED	Chavindu Senarathne
1:100	T.M.L.R.Thennakoon	D.O.A. ACT:	Chavindu Senarathne
JOB NO.	SHEET NO.	REVISION SUFFIX	
2017/14	01/10	DATE : 21-03-2021	

CLIENT DEPT./AUTHORIZED OFFICER'S NAME | DATE

CLIENT SIGNATURE | DESIGNATION

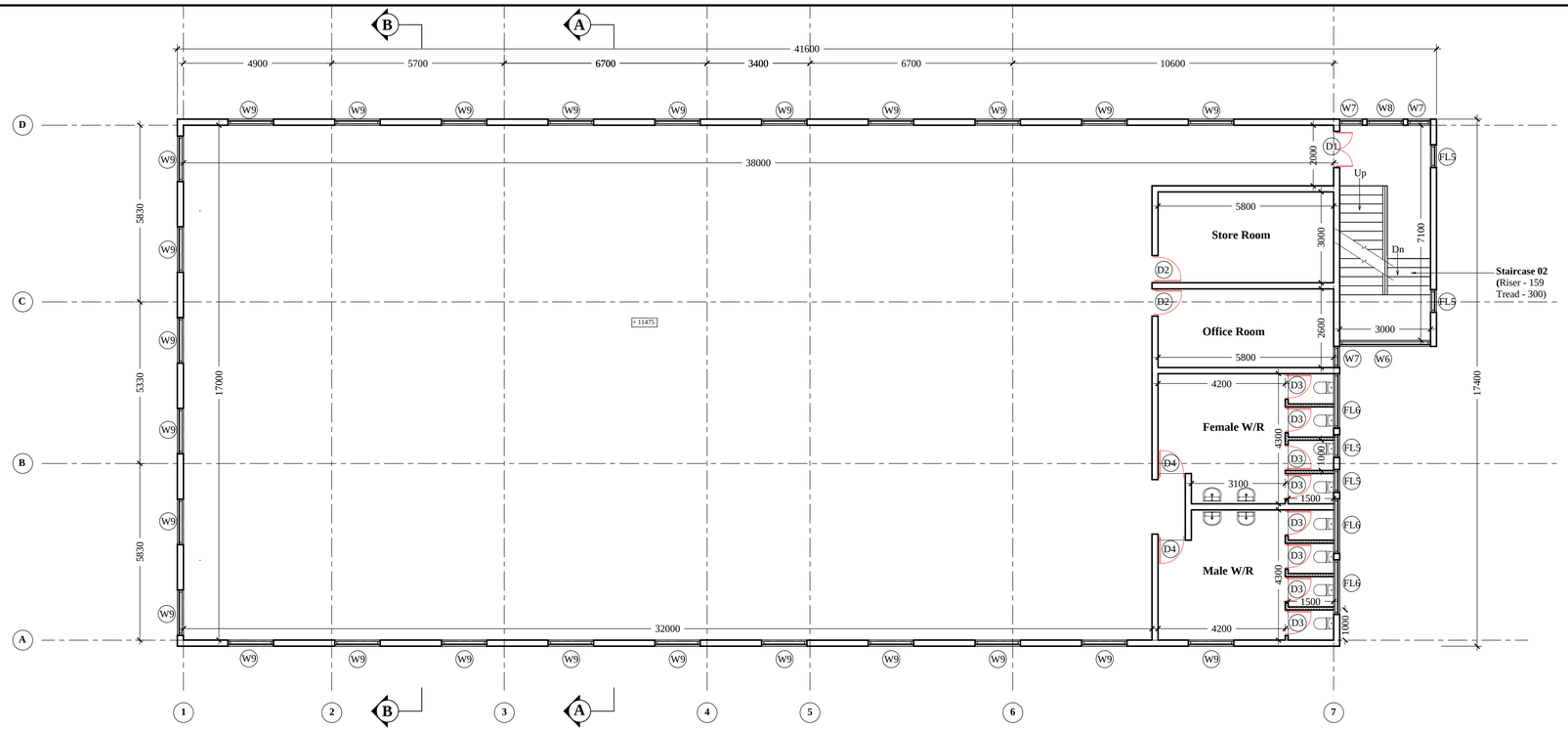

THIRD FLOOR PLAN (Floor Area ; 692.16 m²)

ORIGINAL

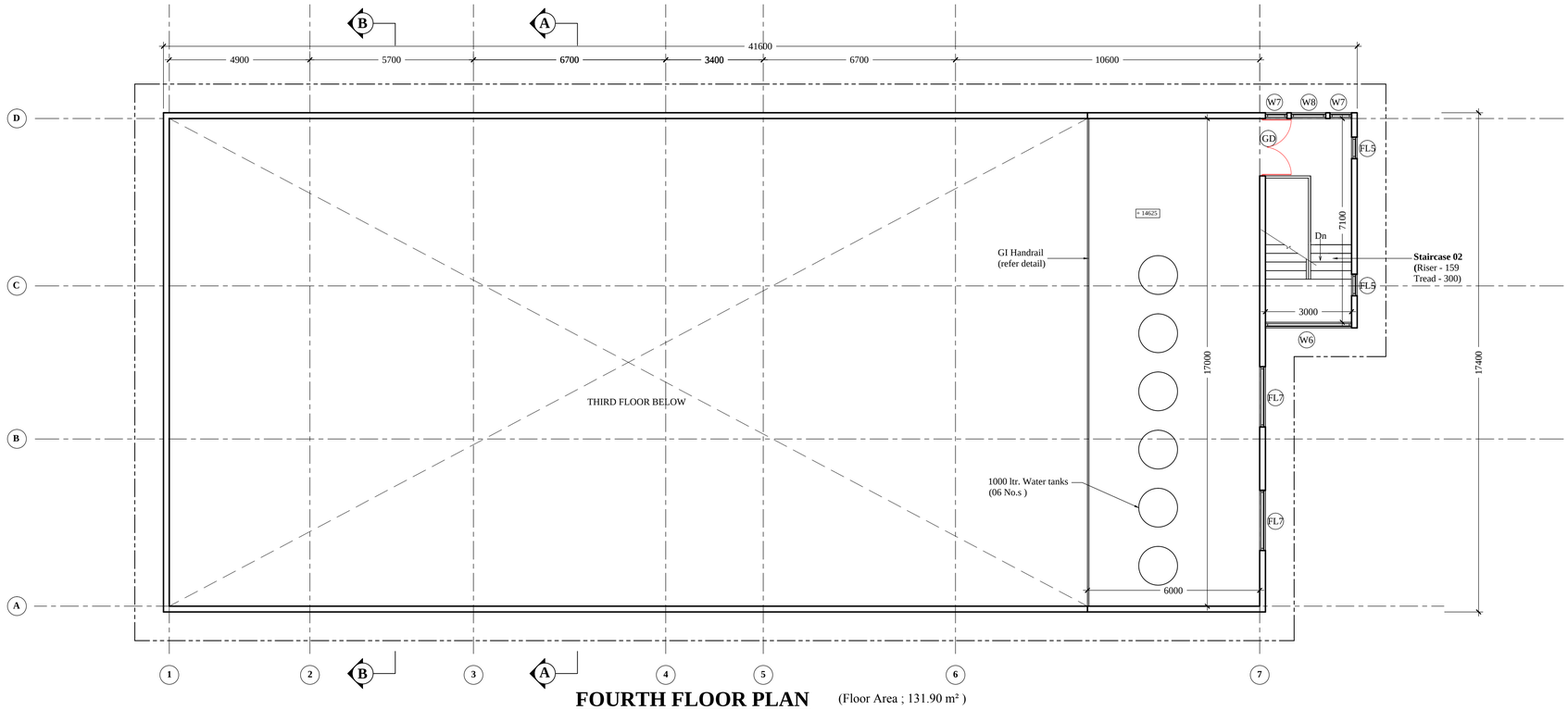

FOURTH FLOOR PLAN (Floor Area ; 131.90 m²)

NOTE

01.This drawing is a property of the Architectural unit of the M.E's Department.
02.This drawing shall not be copied or altered without the consent of the Architect.
03.This drawing must not be scaled.
04.If any discrepancy or error is detected in the drawing it should be immediately notice of the Architect.
05.This drawing should be read in conjunction with structural drawings & all service drawings and any other drawings referred to in here.
06.Any construction work carried out not in accordance with the information in the drawing will be rejected by the Architect.
07.All dimensions to be checked at site prior to the construction.
08. All Aluminium frames, sashes, panels to be powder coated, colour to be approved by the Architect.
09.All floor & wall tile samples to be approved by the Architect.
10.All internal walls to be finished with smooth plaster, skim coat & painted with two coats of Emulsion paint.
11.All external walls to be finished with rough plaster & painted with two coats of Weathershield paint.
12.Existing building structure to be demolished.
13.Rain water and waste water disposal system to Engineer's detail.
14.Sewerage and water supply system to Engineer's detail.
15. Electrical Layout to Electrical Engineer's detail.
16. Overhead water tank & sump capacity to Engineer's detail.

COLOMBO MUNICIPAL COUNCIL
MUNICIPAL ENGINEER'S DEPARTMENT

Job title

PROPOSED PAVILION AT COOREY PLAYGROUND , WELLAWATTA

Drawing title

COUNCIL DRAWING

PROJECT ARCHITECT	*E.G.L.M.ELLUGATHANNE*
PROJECT ENGINEER	*W.M.I.P.KUMARA*
SENIOR ARCHITECT	*S.U.B.DOLAPHHILLA*
CHIEF ARCHITECT	*M.C.L.FERNANDO*
DIRECTOR (Eng./ TDRS)	*G.A.C.R.GANEPOLA*
D.M.C.(Eng.services.)	*Y.SYLVESTER*

SCALE	DRAWN	CHECKED	
1:100	*T.M.L.R.Thennakoon*		*Chavindu Senarathne*
		D.O.A. ACT:	*Chavindu Senarathne*
JOB NO.	SHEET NO.	REVISION SUFFIX	
2017/14	03/10	DATE : 21-03-2021	

CLIENT DEPT./AUTHORIZED OFFICER'S NAME	DATE
CLIENT SIGNATURE	DESIGNATION

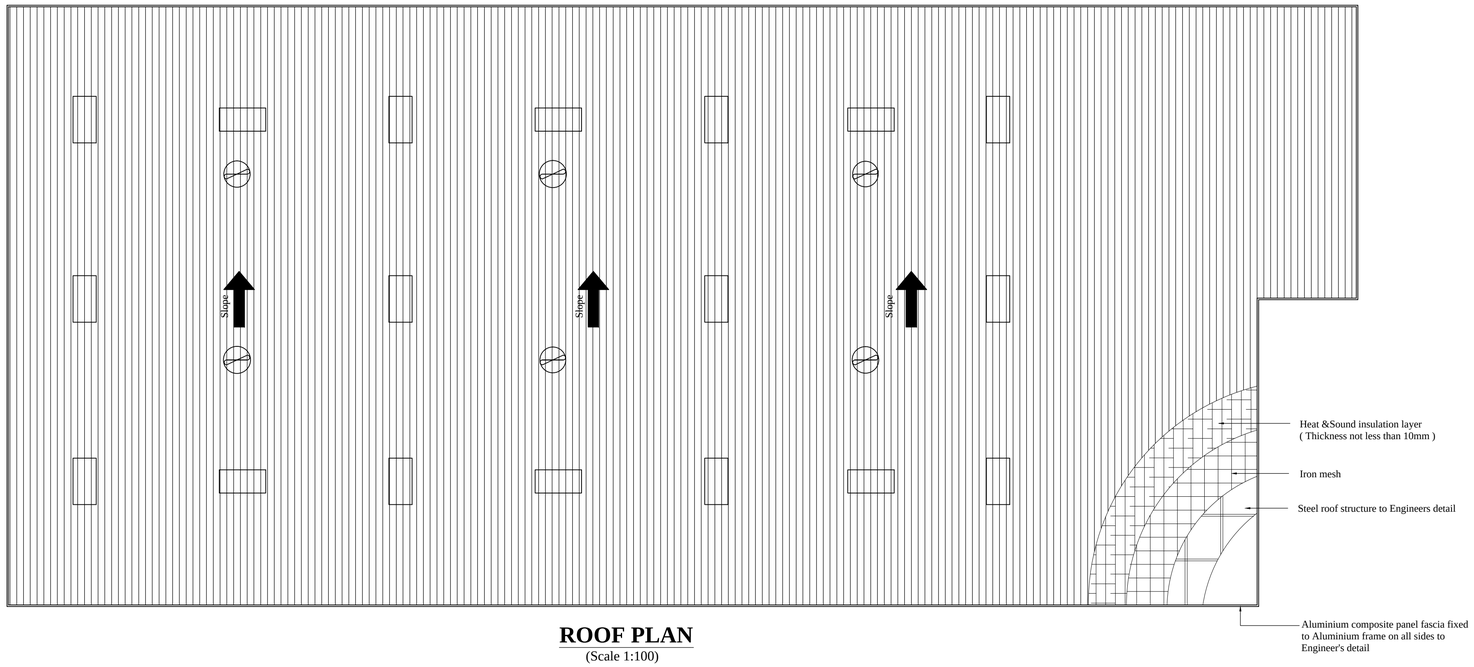

ROOF PLAN
(Scale 1:100)

ORIGINAL

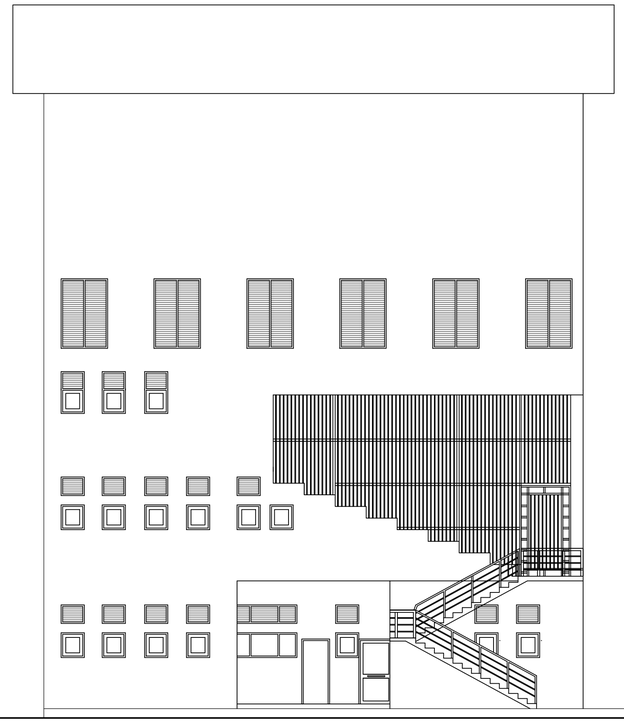

SIDE ELEVATION

DETAIL OF NAME BOARD
SCALE :- 1:50
NOTE :- Letters to be fixed individually on front wall

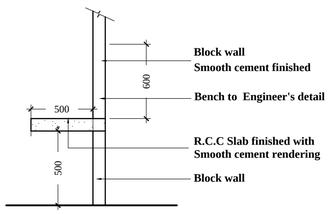

DETAIL OF BENCH
SCALE 1:25

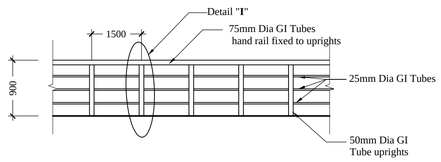

DETAIL OF HANDRAIL
SCALE 1:50

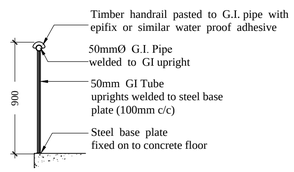

DETAIL "I"
SCALE 1:25

NOTE

01.This drawing is a property of the Architectural unit of the M.E's Department.
02.This drawing shall not be copied or altered without the consent of the Architect.
03.This drawing must not be scaled.
04.If any discrepancy or error is detected in the drawing it should be immediately notice of the Architect.
05.This drawing should be read in conjunction with structural drawings & all service drawings and any other drawings referred to in here.
06.Any construction work carried out not in accordance with the information in the drawing will be rejected by the Architect.
07.All dimensions to be checked at site prior to the construction.
08. All Aluminium frames, sashes, panels to be powder coated, colour to be approved by the Architect.
09.All floor & wall tile samples to be approved by the Architect.
10.All internal walls to be finished with smooth plaster, skim coat & painted with two coats of Emulsion paint.
11.All external walls to be finished with rough plaster & painted with two coats of Weathershield paint.
12.Existing building structure to be demolished.
13.Rain water and waste water disposal system to Engineer's detail.
14.Sewerage and water supply system to Engineer's detail.
15. Electrical Layout to Electrical Engineer's detail.
16. Overhead water tank & sump capacity to Engineer's detail.

COLOMBO MUNICIPAL COUNCIL
MUNICIPAL ENGINEER'S DEPARTMENT

Job title

PROPOSED PAVILION AT COOREY PLAYGROUND , WELLAWATTA

Drawing title

COUNCIL DRAWING

PROJECT ARCHITECT	*E.G.L.M.ELLUGATHANNE*
PROJECT ENGINEER	*W.M.I.P.KUMARA*
SENIOR ARCHITECT	*S.U.B.DOLAPIHILLA*
CHIEF ARCHITECT	*M.C.L.FERNANDO*
DIRECTOR (Eng./ TDRS)	*G.A.C.R.GANEPOLA*
D.M.C.(Eng.services.)	*Y.SYLVESTER*

SCALE	DRAWN	CHECKED	
1:100	*T.M.L.R.Thennakoon*	D.O.A. *ACT:*	*Chavindu Senarathne*
			Chavindu Senarathne
JOB NO.	SHEET NO.	REVISION SUFFIX	
2017/14	04/10	DATE : 21-03-2021	

CLIENT DEPT./AUTHORIZED OFFICER'S NAME | DATE

CLIENT SIGNATURE | DESIGNATION

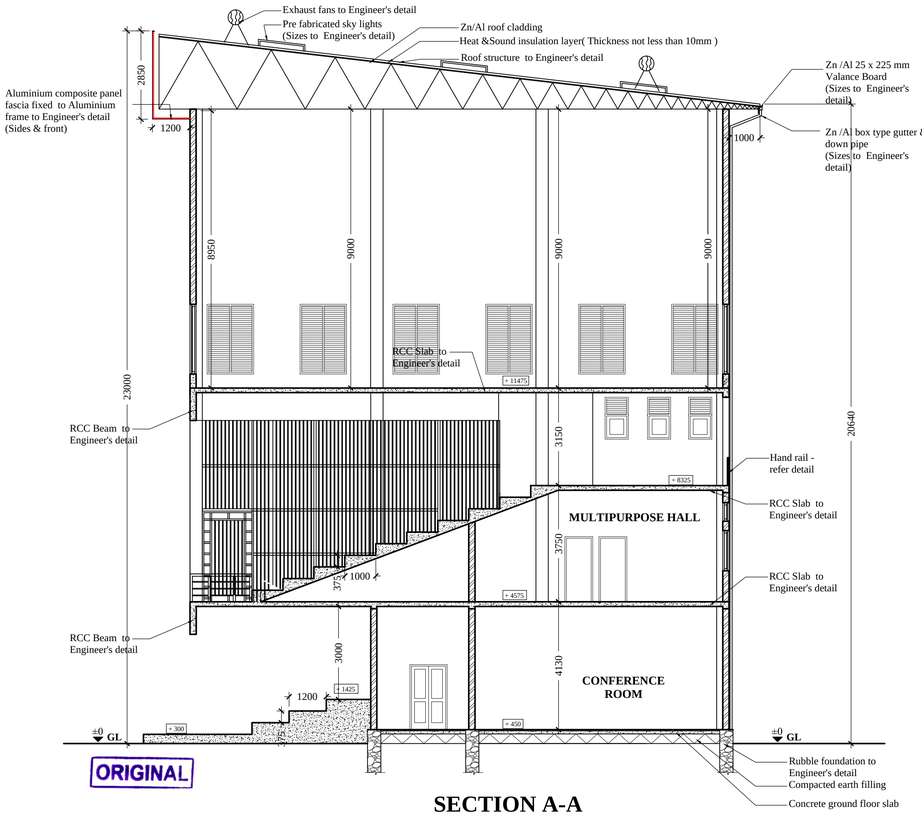

ORIGINAL

SECTION A-A

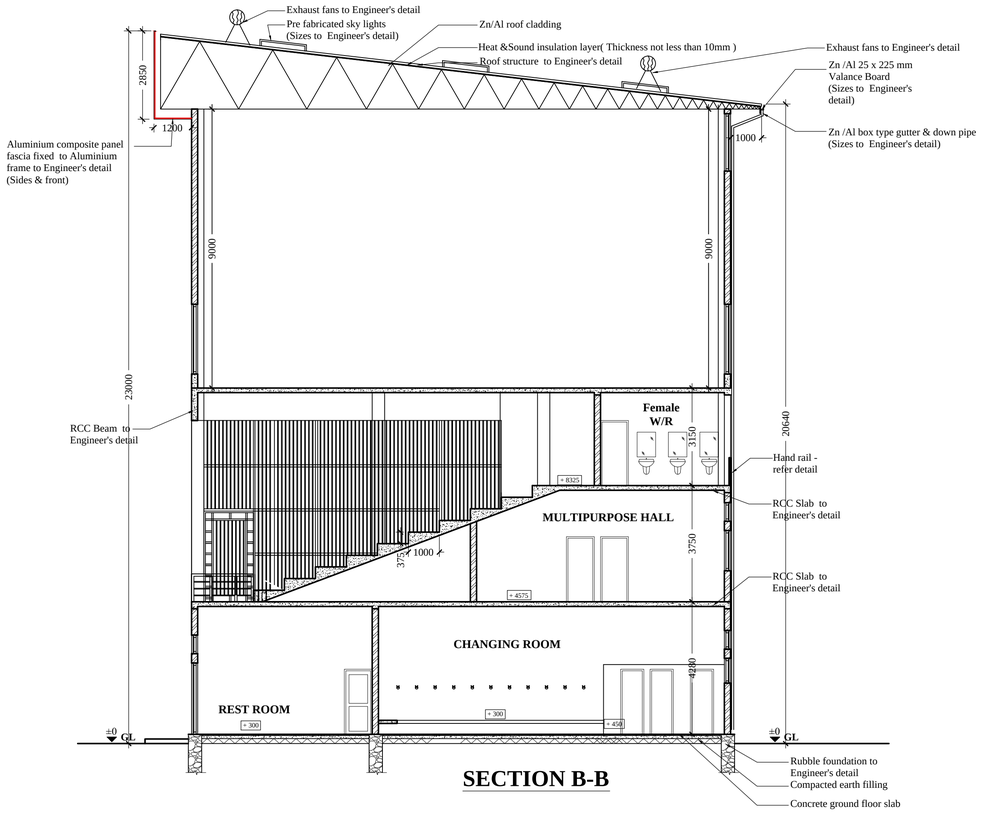

SECTION B-B

NOTE

01.This drawing is a property of the Architectural unit of the M.E's Department.
02.This drawing shall not be copied or altered without the consent of the Architect.
03.This drawing must not be scaled.
04.If any discrepancy or error is detected in the drawing it should be immediately notice of the Architect.
05.This drawing should be read in conjunction with structural drawings & all service drawings and any other drawings referred to in here.
06.Any construction work carried out not in accordance with the information in the drawing will be rejected by the Architect.
07.All dimensions to be checked at site prior to the construction.
08. All Aluminium frames, sashes, panels to be powder coated, colour to be approved by the Architect.
09.All floor & wall tile samples to be approved by the Architect.
10.All internal walls to be finished with smooth plaster, skim coat & painted with two coats of Emulsion paint.
11.All external walls to be finished with rough plaster & painted with two coats of Weathershield paint.
12.Existing building structure to be demolished.
13.Rain water and waste water disposal system to Engineer's detail.
14.Sewerage and water supply system to Engineer's detail.
15. Electrical Layout to Electrical Engineer's detail.
16. Overhead water tank & sump capacity to Engineer's detail.

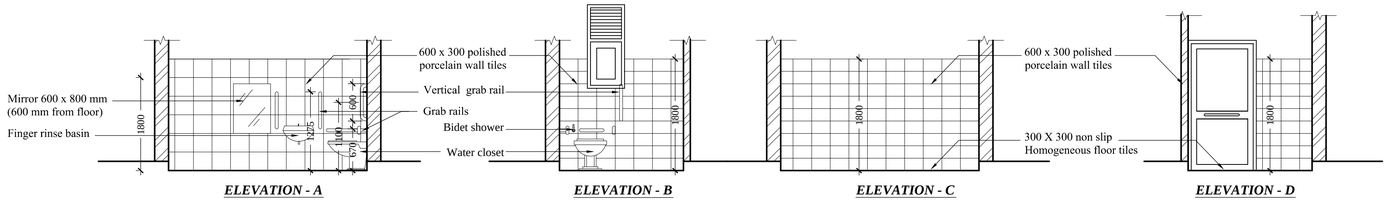

ELEVATION - A | ELEVATION - B | ELEVATION - C | ELEVATION - D

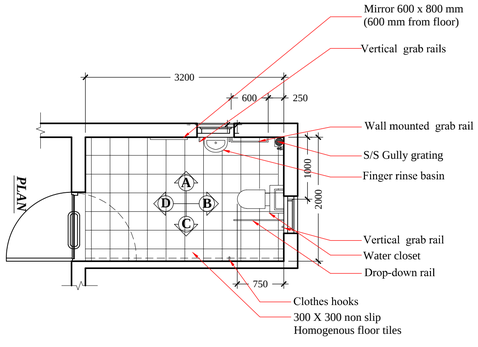

TYPICAL DETAILS OF DISABLE TOILET

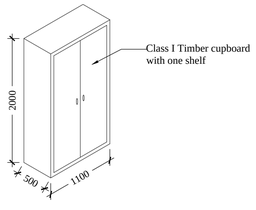

DETAIL OF CUPBOARDS
(At Ground floor)

Scale 1:50

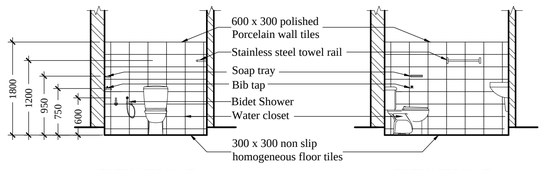

ELEVATION - E | ELEVATION - F

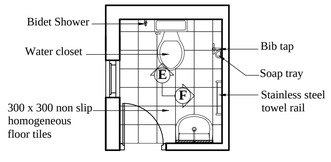

PLAN

TYPICAL DETAILS OF TOILETS

SCALE 1:50

COLOMBO MUNICIPAL COUNCIL
MUNICIPAL ENGINEER'S DEPARTMENT

Job title

PROPOSED PAVILION AT COOREY PLAYGROUND , WELLAWATTA

Drawing title

COUNCIL DRAWING

PROJECT ARCHITECT	E.G.L.M.ELLUGATHANNE
PROJECT ENGINEER	W.M.I.P.KUMARA
SENIOR ARCHITECT	S.U.R.DOLAPIHILLA
CHIEF ARCHITECT	M.C.L.FERNANDO
DIRECTOR (Eng./ TDRS)	G.A.C.R.GANEPOLA
D.M.C.(Eng.services.)	Y.SYLVESTER

SCALE	DRAWN	CHECKED	
1:100	T.M.L.R.Thennakoon	D.O.A.	Chavindu Senarathne
		ACT:	Chavindu Senarathne
JOB NO.	SHEET NO.	REVISION SUFFIX	
2017/14	05/10	DATE : 21-03-2021	

CLIENT DEPT./AUTHORIZED OFFICER'S NAME | DATE

CLIENT SIGNATURE | DESIGNATION

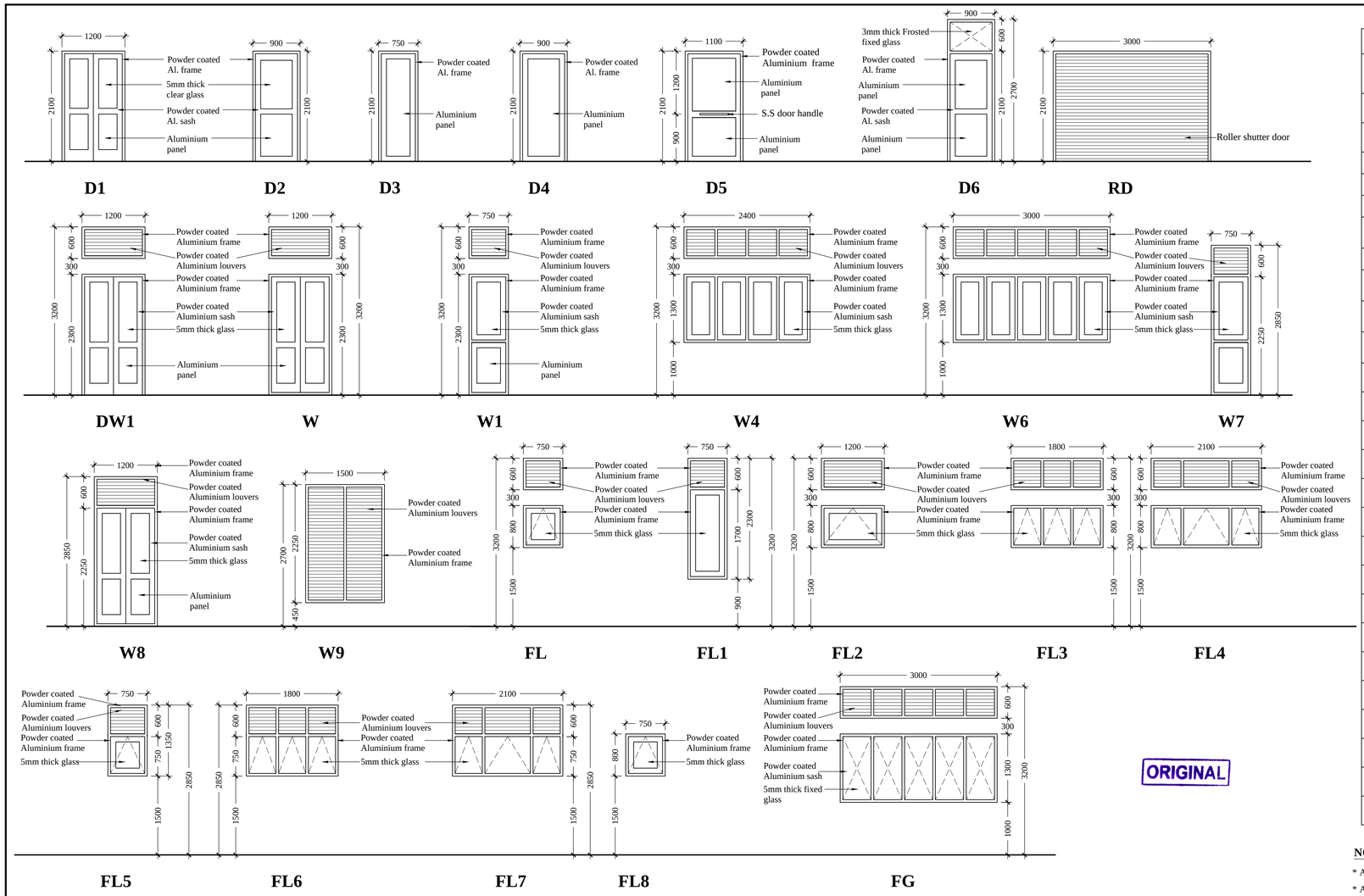

Door Window Schedule

Type	Size	Description	No.s				
			Ground floor	First floor	Second floor	Third floor	Fourth floor
D1	1200 x 2100	Aluminium framed glazed & Aluminium panelled double door	5	1	1	1	-
D2	900 x 2100	Aluminium framed glazed & Aluminium panelled door	7	-	-	2	-
D3	750 x 2100	Heavy duty PVC framed PVC Door	20	6	6	8	-
D4	900 x 2100	Heavy duty PVC framed PVC Door	3	2	2	2	-
D5	1100 x 2100	Aluminium framed single sash glazed swing door	1	-	-	-	-
D6	900 x 2700	Aluminium framed glazed & Aluminium panelled door with fixed glass on top	1	-	-	-	-
RD	3000 x 2100	Roller shutter door	2	1	-	-	-
DW1	1200 x 600 + 1200 x 2300	Aluminium framed glazed Aluminium door-window with louvers on top	5	-	-	-	-
W	1200 x 600 + 1200 x 2300	Aluminium framed glazed Aluminium window with louvers on top	6	-	-	-	-
W1	750 x 600 + 600 x 2300	Aluminium framed glazed Aluminium window with louvers on top	16	-	-	-	-
W4	2400 x 600 + 2400 x 1300	Aluminium framed glazed Aluminium window	-	5	-	-	-
W6	3000 x 600 + 3000 x 1300	Aluminium framed glazed Aluminium window	1	1	1	1	1
W7	750 x 3200	Aluminium framed glazed Aluminium window	-	2	2	3	2
W8	1200 x 3200	Aluminium framed glazed Aluminium window	-	1	1	1	1
W9	1500 x 2250	Aluminium framed fixed Aluminium louvers	-	-	-	20	-
FL	750 x 600 + 750 x 800	Aluminium framed glazed Aluminium fanlight	12	5	-	-	-
FL1	750 x 2300	Aluminium framed glazed Aluminium fanlight	4	2	-	-	-
FL2	1200 x 600 + 1200 x 800	Aluminium framed glazed Aluminium fanlight	3	-	-	-	-
FL3	1800 x 600 + 1800 x 800	Aluminium framed glazed Aluminium fanlight	4	-	-	-	-
FL4	2100 x 600 + 2100 x 800	Aluminium framed glazed Aluminium fanlight	1	1	-	-	-
FL5	750 x 1350	Aluminium framed glazed Aluminium fanlight	-	-	8	4	2
FL6	1800 x 1350	Aluminium framed glazed Aluminium fanlight	-	-	-	3	-
FL7	2100 x 1350	Aluminium framed glazed Aluminium fanlight	-	-	3	-	2
FL8	750 x 800	Aluminium framed glazed Aluminium fanlight	-	1	-	-	-
FG	3000 x 600 + 3000 x 1300	Aluminium framed fixed glazed Aluminium window	-	1	-	-	-
GD	2000 x 2100	Steel framed steel grill door	-	-	-	-	1

ORIGINAL

NOTE

* All Aluminium sections to be Powder coated, Colour to be approved by the Architect.
* All door panels to be 4mm thick Aluinium Composite panels

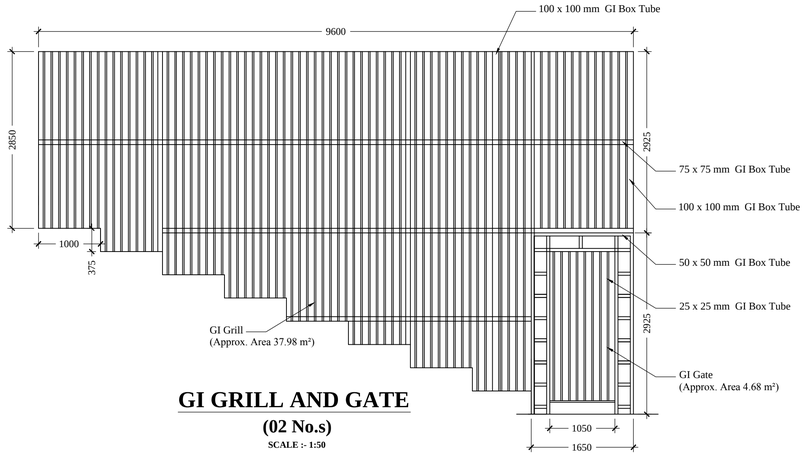

GI GRILL AND GATE

(02 No.s)

SCALE :- 1:50

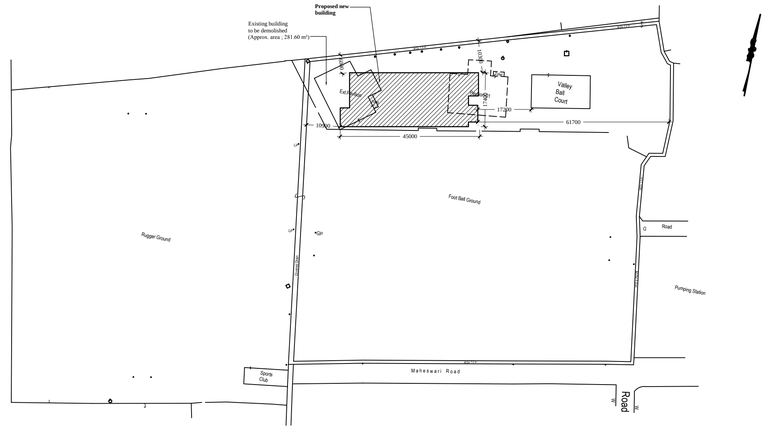

SITE PLAN

Scale :- 1:1000

NOTE

01.This drawing is a property of the Architectural unit of the M.E's Department.
02.This drawing shall not be copied or altered without the consent of the Architect.
03.This drawing must not be scaled.
04.If any discrepancy or error is detected in the drawing it should be immediately notice of the Architect.
05.This drawing should be read in conjunction with structural drawings & all service drawings and any other drawings referred to in here.
06.Any construction work carried out not in accordance with the information in the drawing will be rejected by the Architect.
07.All dimensions to be checked at site prior to the construction.
08. All Aluminium frames, sashes, panels to be powder coated, colour to be approved by the Architect.
09.All floor & wall tile samples to be approved by the Architect.
10.All internal walls to be finished with smooth plaster, skim coat & painted with two coats of Emulsion paint.
11.All external walls to be finished with rough plaster & painted with two coats of Weathershield paint.
12.Existing building structure to be demolished.
13.Rain water and waste water disposal system to Engineer's detail.
14.Sewerage and water supply system to Engineer's detail.
15. Electrical Layout to Electrical Engineer's detail.
16. Overhead water tank & sump capacity to Engineer's detail.

COLOMBO MUNICIPAL COUNCIL
MUNICIPAL ENGINEER'S DEPARTMENT

Job title

PROPOSED PAVILION AT COOREY PLAYGROUND , WELLAWATTA

Drawing title

COUNCIL DRAWING

PROJECT ARCHITECT	*E.G.L.M.ELLUGATHANNE*
PROJECT ENGINEER	*W.M.I.P.KUMARA*
SENIOR ARCHITECT	*S.U.B.DOLAPIHILLA*
CHIEF ARCHITECT	*M.C.L.FERNANDO*
DIRECTOR (Eng./ TDRS)	*G.A.C.R.GANEPOLA*
D.M.C.(Eng.services.)	*Y.SYLVESTER*

SCALE	DRAWN	CHECKED	
1:100	*T.M.L.R.Thennakoon*	D.O.A. *ACT:*	*Chavindu Senarathne*
			Chavindu Senarathne
JOB NO.	SHEET NO.	REVISION SUFFIX	
2017/14	06/10	DATE : 21-03-2021	

CLIENT DEPT./AUTHORIZED OFFICER'S NAME | DATE

CLIENT SIGNATURE | DESIGNATION

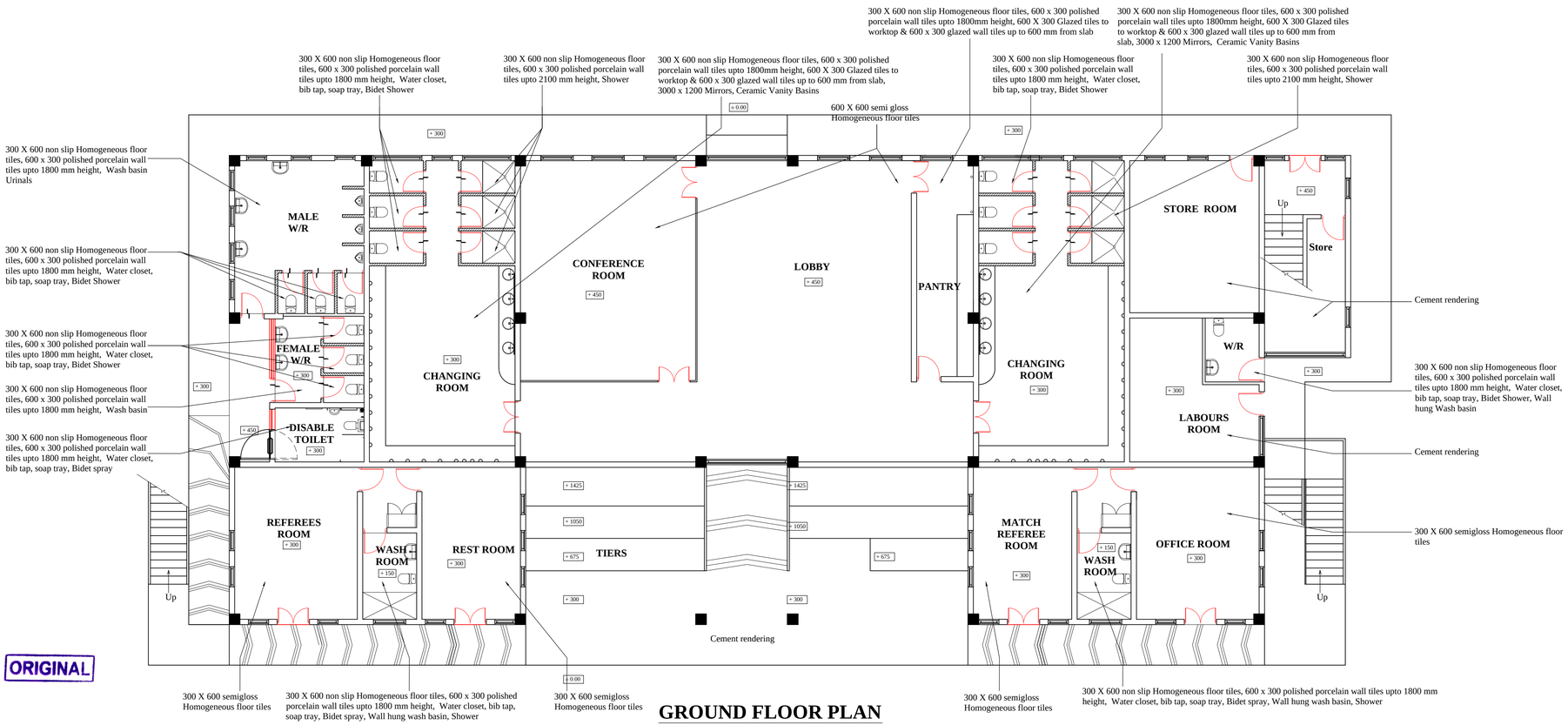

ORIGINAL

GROUND FLOOR PLAN

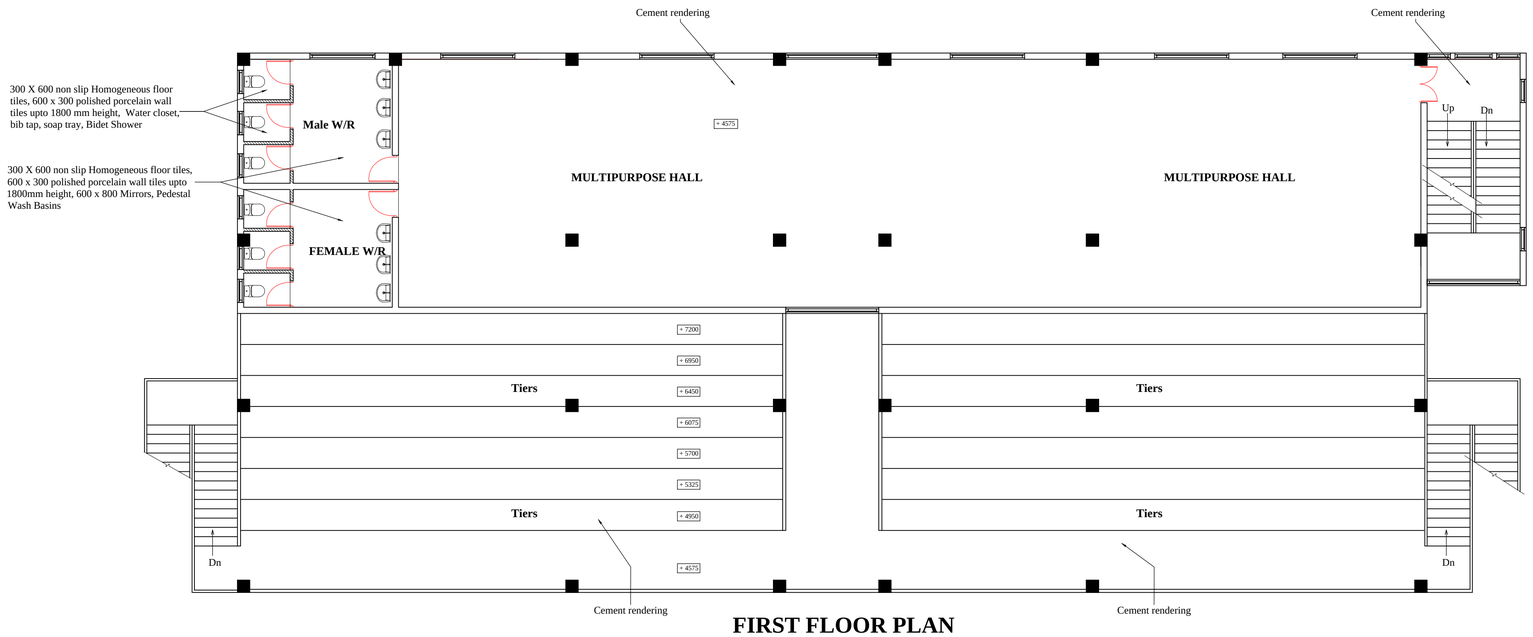

FIRST FLOOR PLAN

NOTE

01.This drawing is a property of the Architectural unit of the M.E's Department.
02.This drawing shall not be copied or altered without the consent of the Architect.
03.This drawing must not be scaled.
04.If any discrepancy or error is detected in the drawing it should be immediately notice of the Architect.
05.This drawing should be read in conjunction with structural drawings & all service drawings and any other drawings referred to in here.
06.Any construction work carried out not in accordance with the information in the drawing will be rejected by the Architect.
07.All dimensions to be checked at site prior to the construction.
08. All Aluminium frames, sashes, panels to be powder coated, colour to be approved by the Architect.
09.All floor & wall tile samples to be approved by the Architect.
10.All internal walls to be finished with smooth plaster, skim coat & painted with two coats of Emulsion paint.
11.All external walls to be finished with rough plaster & painted with two coats of Weathershield paint.
12.Existing building structure to be demolished.
13.Rain water and waste water disposal system to Engineer's detail.
14.Sewerage and water supply system to Engineer's detail.
15. Electrical Layout to Electrical Engineer's detail.
16. Overhead water tank & sump capacity to Engineer's detail.

COLOMBO MUNICIPAL COUNCIL
MUNICIPAL ENGINEER'S DEPARTMENT

Job title

PROPOSED PAVILION AT COOREY PLAYGROUND , WELLAWATTA

Drawing title

COUNCIL DRAWING

PROJECT ARCHITECT	*E.G.L.M.ELLUGATHANNE*
PROJECT ENGINEER	*W.M.I.P.KUMARA*
SENIOR ARCHITECT	*S.U.B.DOLAPIHILLA*
CHIEF ARCHITECT	*M.C.L.FERNANDO*
DIRECTOR (Eng./ TDRS)	*G.A.C.R.GANEPOLA*
D.M.C.(Eng.services.)	*Y.SYLVESTER*

SCALE	DRAWN	CHECKED	
1:100	*T.M.L.R.Thennakoon*	D.O.A. *ACI:*	*Chavindu Senarathne*
			Chavindu Senarathne
JOB NO.	SHEET NO.	REVISION SUFFIX	
2017/14	07/10		

CLIENT DEPT./AUTHORIZED OFFICER'S NAME | DATE

CLIENT SIGNATURE | DESIGNATION

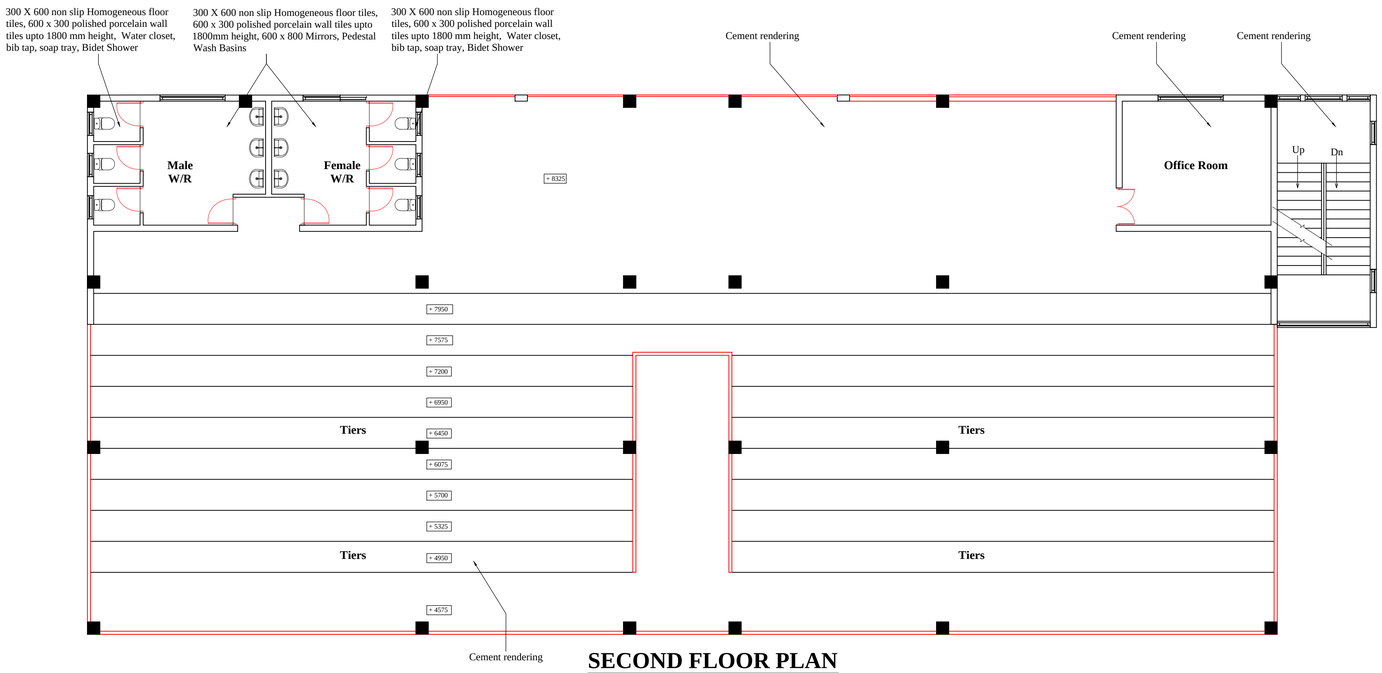

SECOND FLOOR PLAN

ORIGINAL

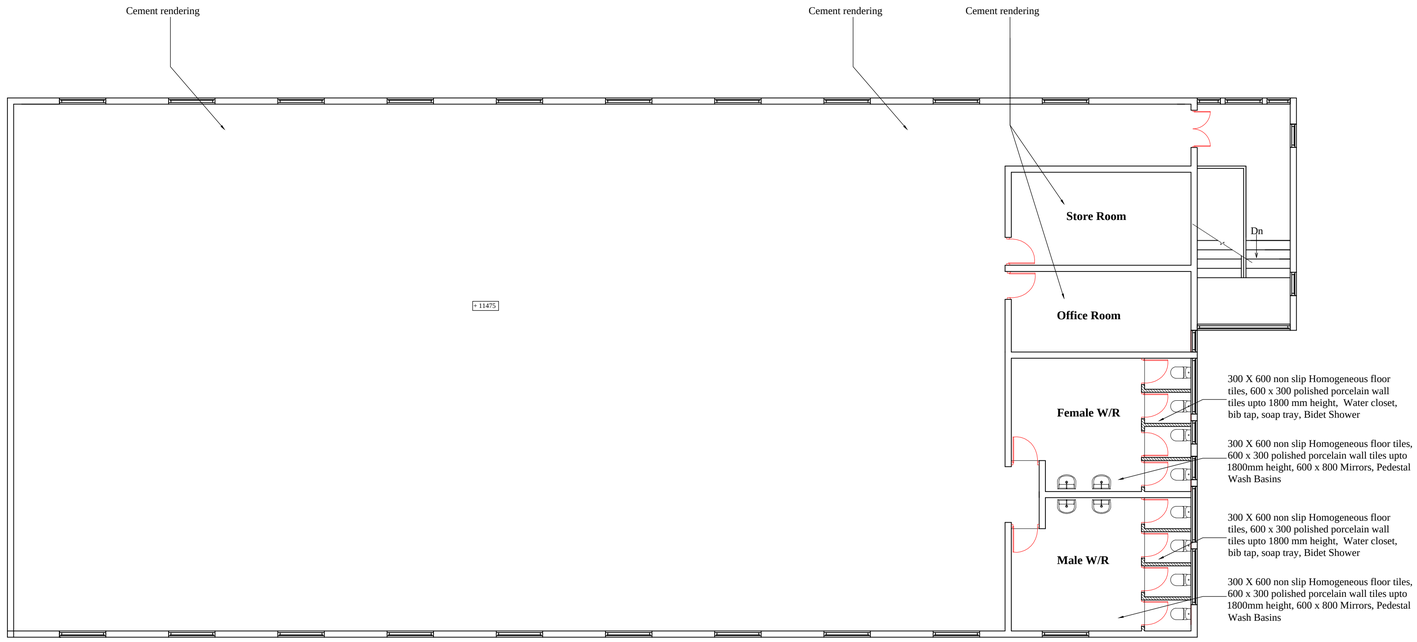

THIRD FLOOR PLAN

NOTE

01.This drawing is a property of the Architectural unit of the M.E's Department.
02.This drawing shall not be copied or altered without the consent of the Architect.
03.This drawing must not be scaled.
04.If any discrepancy or error is detected in the drawing it should be immediately notice of the Architect.
05.This drawing should be read in conjunction with structural drawings & all service drawings and any other drawings referred to in here.
06.Any construction work carried out not in accordance with the information in the drawing will be rejected by the Architect.
07.All dimensions to be checked at site prior to the construction.
08. All Aluminium frames, sashes, panels to be powder coated, colour to be approved by the Architect.
09.All floor & wall tile samples to be approved by the Architect.
10.All internal walls to be finished with smooth plaster, skim coat & painted with two coats of Emulsion paint.
11.All external walls to be finished with rough plaster & painted with two coats of Weathershield paint.
12.Existing building structure to be demolished.
13.Rain water and waste water disposal system to Engineer's detail.
14.Sewerage and water supply system to Engineer's detail.
15. Electrical Layout to Electrical Engineer's detail.
16. Overhead water tank & sump capacity to Engineer's detail.

COLOMBO MUNICIPAL COUNCIL
MUNICIPAL ENGINEER'S DEPARTMENT

Job title

PROPOSED PAVILION AT COOREY PLAYGROUND , WELLAWATTA

Drawing title

COUNCIL DRAWING

PROJECT ARCHITECT	*E.G.L.M.ELLUGATHANNE*
PROJECT ENGINEER	*W.M.I.P.KUMARA*
SENIOR ARCHITECT	*S.U.B.DOLAPIHILLA*
CHIEF ARCHITECT	*M.C.L.FERNANDO*
DIRECTOR (Eng./ TDRS)	*G.A.C.R.GANEPOLA*
D.M.C.(Eng.services.)	*Y.SYLVESTER*

SCALE	DRAWN	CHECKED	
1:100	*T.M.L.R.Thennakoon*		*Chavindu Senarathne*
		D.O.A. ACT:	*Chavindu Senarathne*
JOB NO.	SHEET NO.	REVISION SUFFIX	
2017/14	08/10	DATE : 21-03-2021	

CLIENT DEPT./AUTHORIZED OFFICER'S NAME | DATE

CLIENT SIGNATURE | DESIGNATION

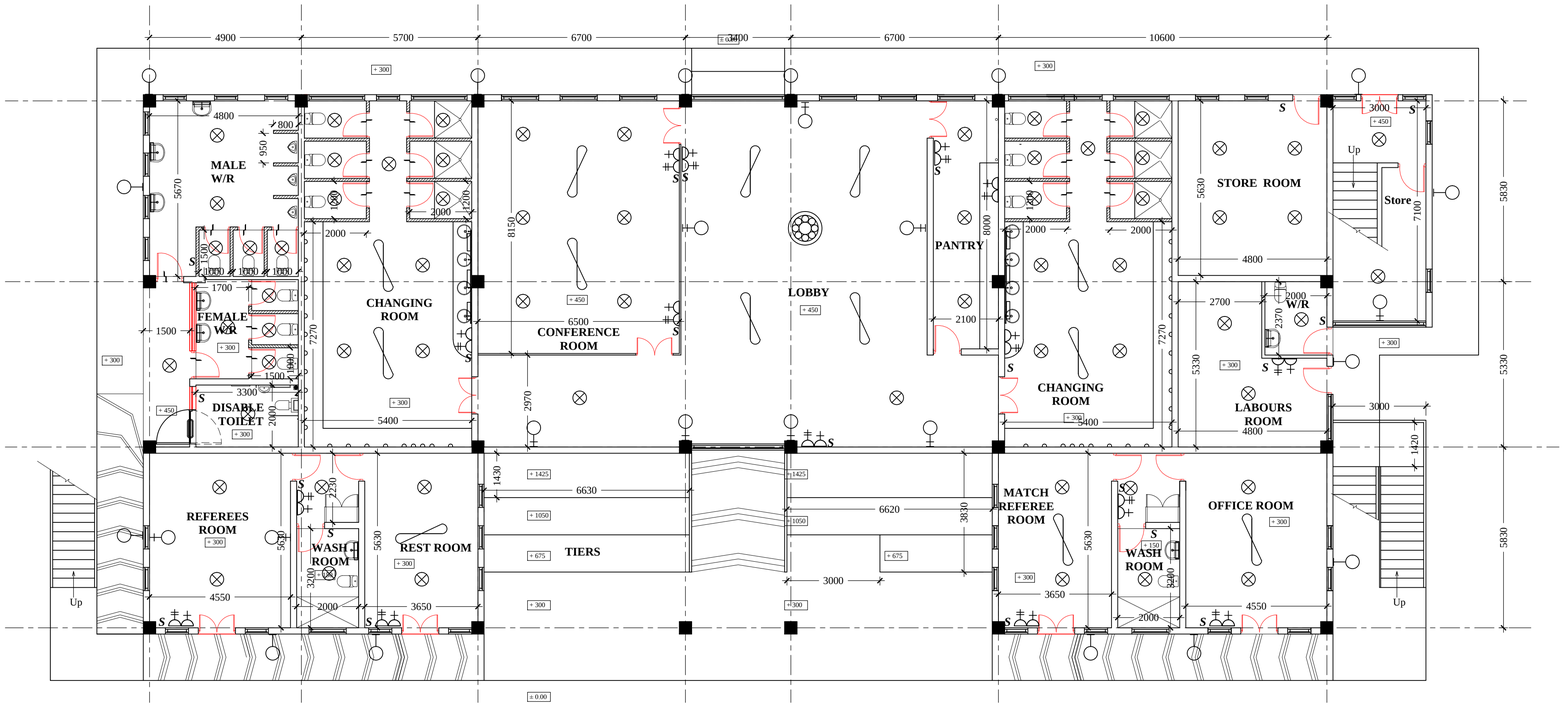

GROUND FLOOR ELECTRICAL LAYOUT

ORIGINAL

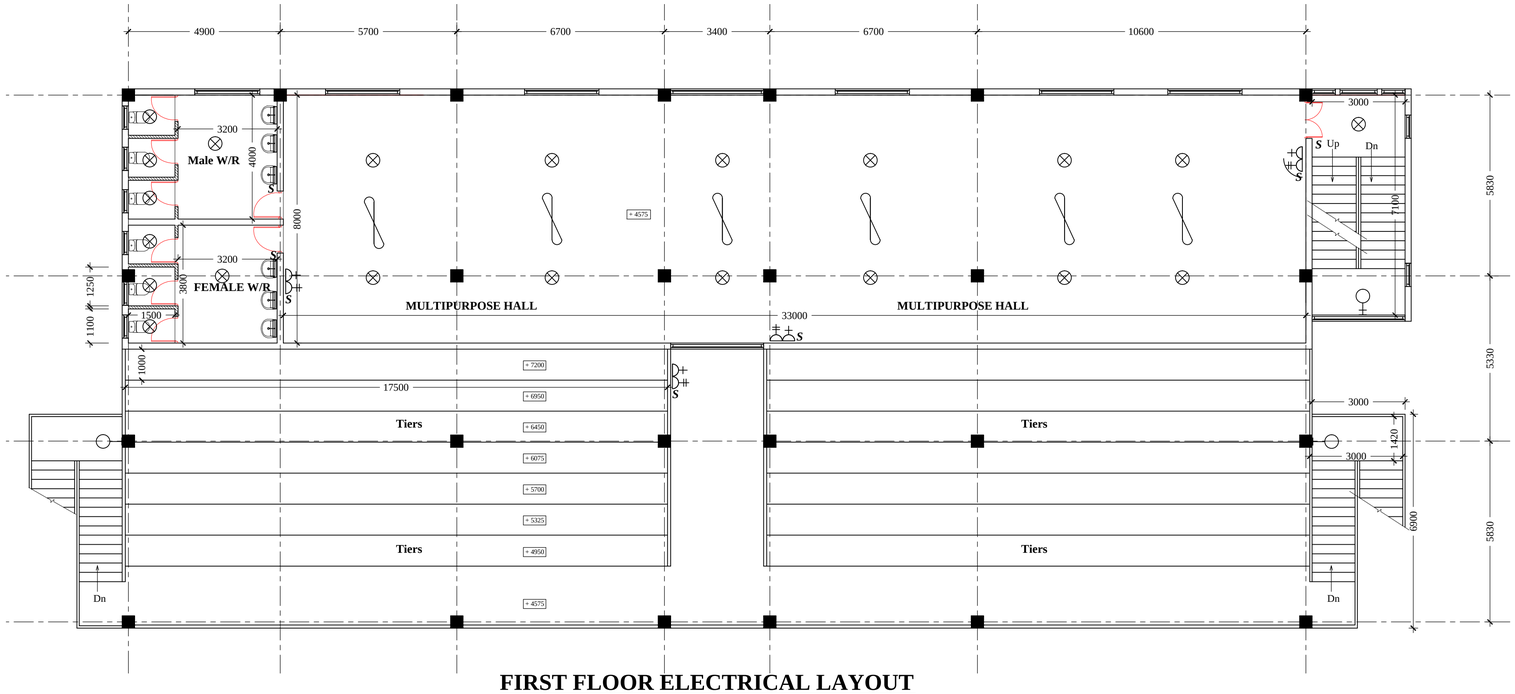

FIRST FLOOR ELECTRICAL LAYOUT

SYMBOLS OF ELECTRICAL ITEMS

Description	Symbol
CEILING FAN	
OUTDOOR WALL BRACKET LAMPS	
INDOOR WALL BRACKET LAMPS	
PENDENT LAMPS	
05 A SOCKET OUTLET	
15 A SOCKET OUTLET	
SWITCH	S
MIRROR LAMPS	
CHANDELIERS	
Non Glare Badminton court lamp	
SKY LIGHT (Pre fabricated sky lights. size may vary slightly according to the supplier. Prior approval of the sample to be taken from the Architect.)	
EXHAUST FANS	

NOTE

01.This drawing is a property of the Architectural unit of the M.E's Department.
02.This drawing shall not be copied or altered without the consent of the Architect.
03.This drawing must not be scaled.
04.If any discrepancy or error is detected in the drawing it should be immediately notice of the Architect.
05.This drawing should be read in conjunction with structural drawings & all service drawings and any other drawings referred to in here.
06.Any construction work carried out not in accordance with the information in the drawing will be rejected by the Architect.
07.All dimensions to be checked at site prior to the construction.
08. All Aluminium frames, sashes, panels to be powder coated, colour to be approved by the Architect.
09.All floor & wall tile samples to be approved by the Architect.
10.All internal walls to be finished with smooth plaster, skim coat & painted with two coats of Emulsion paint.
11.All external walls to be finished with rough plaster & painted with two coats of Weathershield paint.
12.Existing building structure to be demolished.
13.Rain water and waste water disposal system to Engineer's detail.
14.Sewerage and water supply system to Engineer's detail.
15. Electrical Layout to Electrical Engineer's detail.
16. Overhead water tank & sump capacity to Engineer's detail.

COLOMBO MUNICIPAL COUNCIL
MUNICIPAL ENGINEER'S DEPARTMENT

Job title

PROPOSED PAVILION AT COOREY PLAYGROUND , WELLAWATTA

Drawing title

COUNCIL DRAWING

PROJECT ARCHITECT	E.G.L.M.ELLUGATHANNE
PROJECT ENGINEER	W.M.I.P.KUMARA
SENIOR ARCHITECT	S.U.B.DOLAPIHILLA
CHIEF ARCHITECT	M.C.L.FERNANDO
DIRECTOR (Eng./ TDRS)	G.A.C.R.GANEPOLA
D.M.C.(Eng.services.)	Y.SYLVESTER

SCALE	DRAWN	CHECKED	
1:100	T.M.L.R.Thennakoon		Chavindu Senarathne
		D.O.A. ACF:	Chavindu Senarathne
JOB NO.	SHEET NO.	REVISION SUFFIX	
2017/14	09/10	DATE : 21-03-2021	

CLIENT DEPT./AUTHORIZED OFFICER'S NAME | DATE

CLIENT SIGNATURE | DESIGNATION

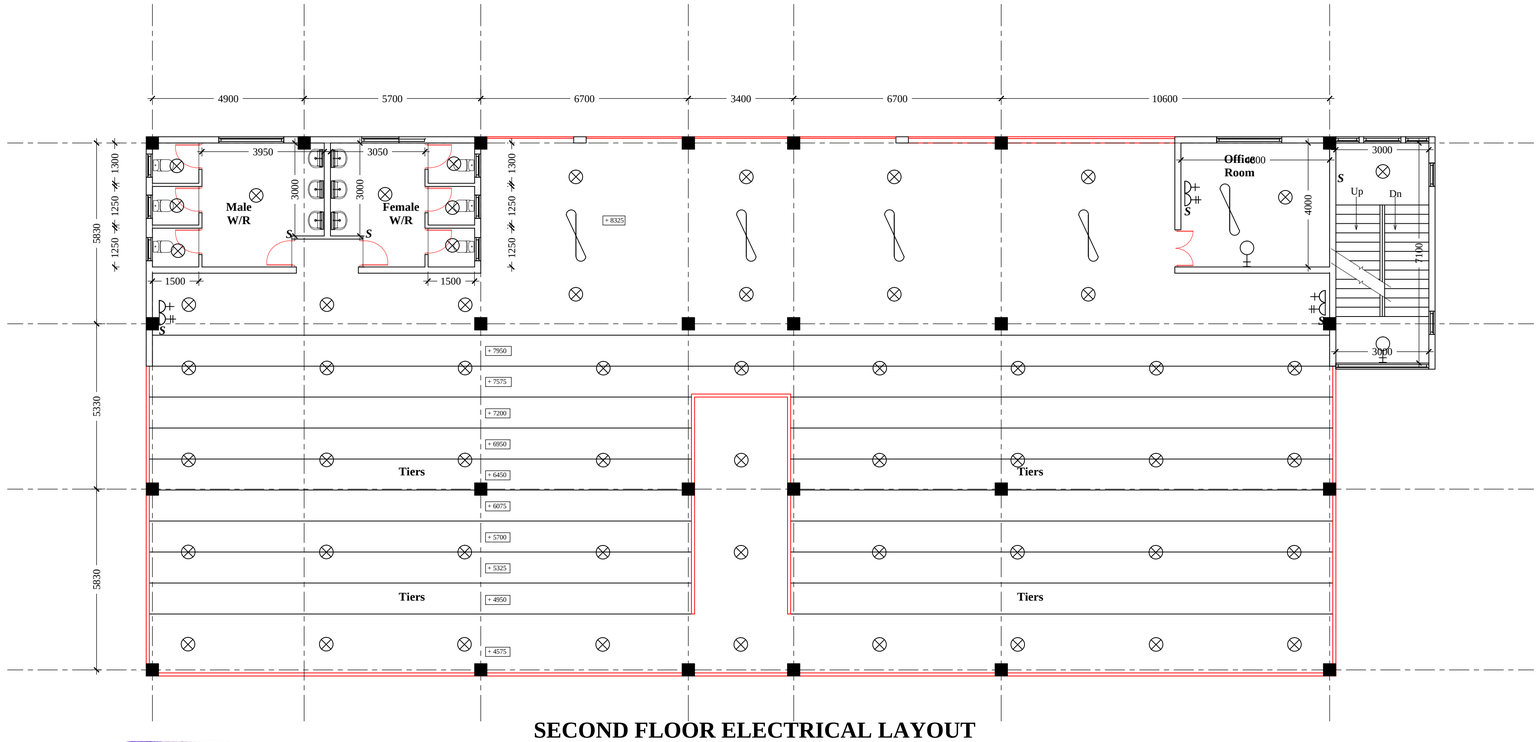

SECOND FLOOR ELECTRICAL LAYOUT

ORIGINAL

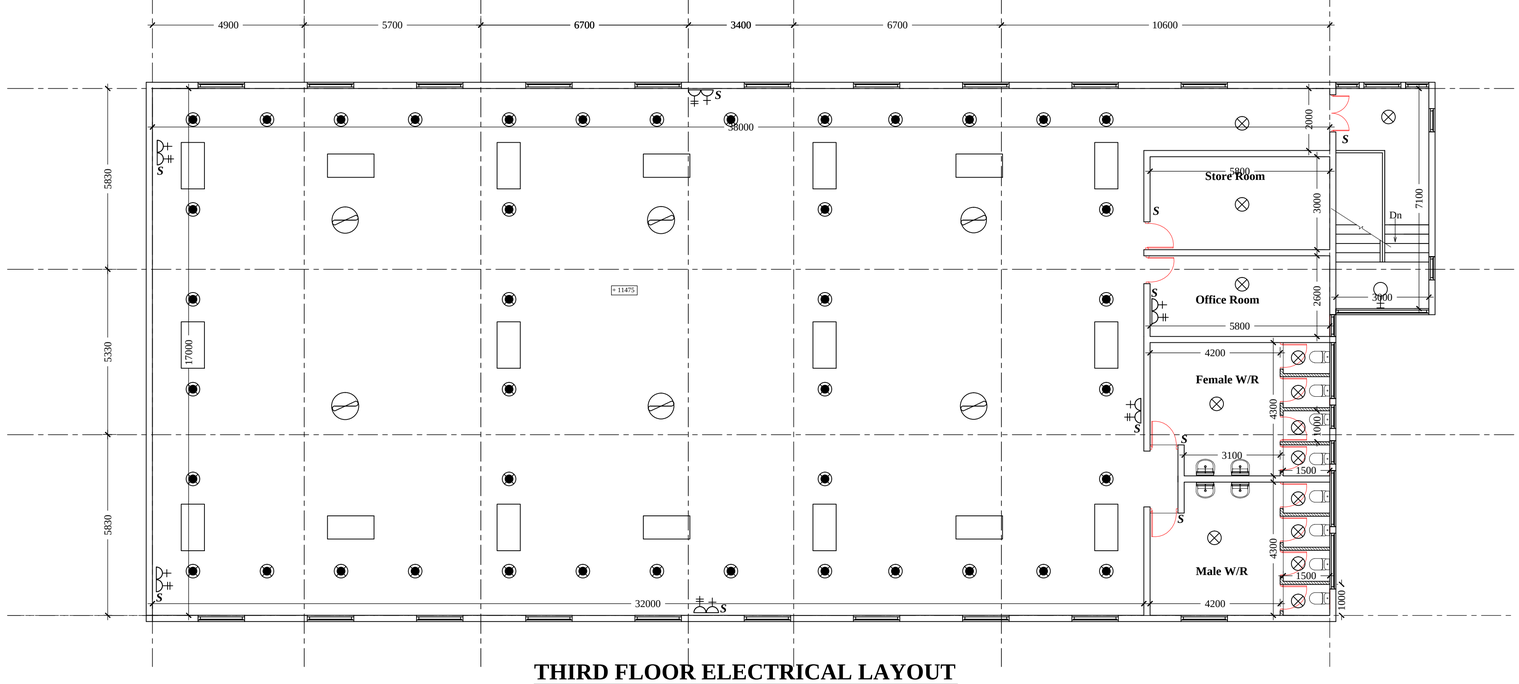

THIRD FLOOR ELECTRICAL LAYOUT

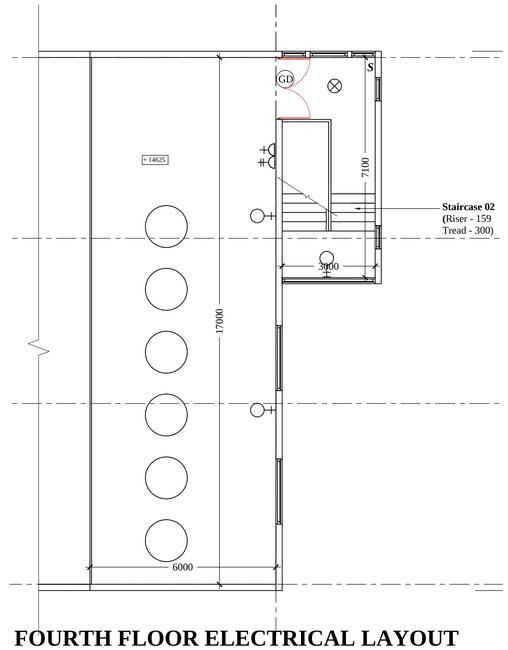

FOURTH FLOOR ELECTRICAL LAYOUT

SYMBOLS OF ELECTRICAL ITEMS

Description	Symbol
CEILING FAN	
OUTDOOR WALL BRACKET LAMPS	
INDOOR WALL BRACKET LAMPS	
PENDENT LAMPS	
05 A SOCKET OUTLET	
15 A SOCKET OUTLET	
SWITCH	S
MIRROR LAMPS	
CHANDELIERS	
Non Glare Badminton court lamp	
SKY LIGHT (Pre fabricated sky lights. size may vary slightly according to the supplier. Prior approval of the sample to be taken from the Architect.)	
EXHAUST FANS	

NOTE

01.This drawing is a property of the Architectural unit of the M.E's Department.
02.This drawing shall not be copied or altered without the consent of the Architect.
03.This drawing must not be scaled.
04.If any discrepancy or error is detected in the drawing it should be immediately notice of the Architect.
05.This drawing should be read in conjunction with structural drawings & all service drawings and any other drawings referred to in here.
06.Any construction work carried out not in accordance with the information in the drawing will be rejected by the Architect.
07.All dimensions to be checked at site prior to the construction.
08. All Aluminium frames, sashes, panels to be powder coated, colour to be approved by the Architect.
09.All floor & wall tile samples to be approved by the Architect.
10.All internal walls to be finished with smooth plaster, skim coat & painted with two coats of Emulsion paint.
11.All external walls to be finished with rough plaster & painted with two coats of Weathershield paint.
12.Existing building structure to be demolished.
13.Rain water and waste water disposal system to Engineer's detail.
14.Sewerage and water supply system to Engineer's detail.
15. Electrical Layout to Electrical Engineer's detail.
16. Overhead water tank & sump capacity to Engineer's detail.

COLOMBO MUNICIPAL COUNCIL
MUNICIPAL ENGINEER'S DEPARTMENT

Job title

PROPOSED PAVILION AT COOREY PLAYGROUND , WELLAWATTA

Drawing title

COUNCIL DRAWING

PROJECT ARCHITECT	E.G.L.M.ELLUGATHANNE
PROJECT ENGINEER	W.M.I.P.KUMARA
SENIOR ARCHITECT	S.U.B.DOLAPIHILLA
CHIEF ARCHITECT	M.C.L.FERNANDO
DIRECTOR (Eng./ TDRS)	G.A.C.R.GANEPOLA
D.M.C.(Eng.services.)	Y.SYLVESTER

SCALE	DRAWN	CHECKED	
1:100	T.M.L.R.Thennakoon	D.O.A. ACT:	Chavindu Senarathne
JOB NO.	SHEET NO.	REVISION SUFFIX	
2017/14	10/10	DATE : 21-03-2021	

CLIENT DEPT./AUTHORIZED OFFICER'S NAME | DATE

CLIENT SIGNATURE | DESIGNATION

ORIGINAL

SECTION 11

STANDARD FORMS (BID)

- BID Security

ORIGINAL

FORM OF BID SECURITY

[this Guarantee form shall be filled in accordance with the instructions indicated in brackets]

---------- [insert issuing agency's name, and address of issuing branch or office]

Beneficiary: Municipal Commissioner, Colombo Municipal Council, Town Hall, Colombo 7

Date: ---------- *[insert (by issuing agency) date]*

BID GUARANTEE No.: ---------- *[insert (by issuing agency) number]*

We have been informed that ---------- *[insert (by issuing agency) name of the Bidder]* (hereinafter called "the Bidder") has submitted to you its bid dated ---------- --------- *[insert (by issuing agency) date]*(hereinafter called "the Bid") for the execution of *[insert name of Contract]* under Invitation for Bids No. ---------- *[insert IFB number]* ("the IFB").

Further more, we understand that, according to your conditions, Bids must be supported by a Bid Guarantee.

At the request of the Bidder, we ---------- *[insert name of issuing agency]* hereby irrevocably undertake to pay you any sum or sums not exceeding in total an amount of ---------- *[insert amount in figures]* ---------- ----- *[insert amount in words]*) upon receipt by us of your first demand in writing accompanied by a written statement stating that the Bidder is in breach of its obligation(s) under the bid conditions, because the Bidder:

(a) has withdrawn its Bid during the period of bid validity specified; or

(b) does not accept the correction of errors in accordance with the Instructions to Bidders (hereinafter "the ITB") of the IFB; or

(c) having been notified of the acceptance of its Bid by the Employer/Purchaser during the period of bid validity, (i) fails or refuses to execute the Contract Form, if required, or (ii) fails or refuses to furnish the Performance Security, in accordance with the ITB.

This Guarantee shall expire: (a) if the Bidder is the successful bidder, upon our receipt of copies of the Contract signed by the Bidder and of the Performance Security issued to you by the Bidder; or (b) if the Bidder is not the successful bidder, upon the earlier of (i) the successful bidder furnishing the performance security, otherwise it will remain in force up to **22.06.2022.** Consequently, any demand for payment under this Guarantee must be received by us at the office on or before that date.

Signatures

සමාගම් රෙජිස්ට්‍රාර් දෙපාර්තමේන්තුව
கம்பனிகள் பதிவாளர் திணைக்களம்
DEPARTMENT OF THE REGISTRAR OF COMPANIES

'සමාගම් මැදුර'
400, ඩී.ආර්. විජේවර්ධන මාවත,
කොළඹ 10.
'சமகம் மெதுர'
400, டீ.ஆர். விஜேவர்தன மாவத்தை,
கொழும்பு 10.
'SAMAGAM MEDURA'
400, D.R. Wijewardena Mawatha,
Colombo 10.
Email : registrar@drc.gov.lk
Web Site : www.drc.gov.lk

දුරකථනය / தொலைபேசி / Telephone: 2689201 / 2689202
ටෙලෙක්ස් / தொலைநகல் / Telex: "රෙජිස්ට්‍රාර්" "பதிவாளர்" "Registrar"
තැපැල් අංකය / த.பெ. இல. / P.O. Box: 1502
ෆැක්ස් / தொலைநகல் / Fax: 2689211

මගේ අංකය / எனது இல. / My No. PCA / 13278

ඔබේ අංකය / உமது இல. / Your No.

දිනය / திகதி / Date 2013-09-02

J.M හදුනි ජයවර්ධන මිය
නාගරික කොමසාරිස්
කොළඹ මහනගර සභාව
කොළඹ 07

ORIGINAL

පොදු කොන්ත්‍රාත් නිවිසුම් ලියාපදිංචි කිරීම .

1987 අංක 3 දරණ පොදු කොන්ත්‍රාත් නිවිසුම් පණතේ 8 වන වගන්තිය අනුව කොන්ත්‍රාත් මිලවැය මිලියන 05 ඉක්මවන විට කොන්ත්‍රාත්කරු හෝ කොන්ත්‍රාත්කරු සඳහා හෝ වෙනුවෙන් කටයුතු කරන අනුශෝජිතයකු , උප අනුශෝජිතයකු , නියෝජිතයකු හෝ නාමිකයකු ලෙස ආකෘති පත්‍ර 1 මගින් ලියාපදිංචි විය යුතුය.

එසේම එම කොන්ත්‍රාත්කරය ප්‍රධානය වීමෙන් අනතුරුව , කොන්ත්‍රාත්කරය ලබාගත් පාර්ශවය විසින් එකී කොන්ත්‍රාත්කරය ප්‍රධානය කල දින සිට දින 60ක් ඇතුලත ආකෘති පත්‍ර 2 මගින් අදාල තොරතුරු පොදු කොන්ත්‍රාත් රෙජිස්ට්‍රාර්වරයා වෙත ඉදිරිපත් කල යුතු අතර එසේ නොකිරීම පණතේ 9 (1) වගන්තිය අනුව දඩුවම් ලැබිය හැකි වරදකි.

2013/08/01ර දිනැති ඔබගේ ලිපිය දැන්වීමට අනුව CPD 20/1930/2013 දරණ කොන්ත්‍රාත්කරය සඳහා අයදුම්පත් 01 ක් මෙම දෙපාර්තමේන්තුව වෙත ලැබී ඇති අතර , ඒ සඳහා බලපත්‍රය නිකුත් කර ඇත. එබැවින් කොන්ත්‍රාත්කරයක් ප්‍රධානය කල විට කොන්ත්‍රාත්කරය ප්‍රධානය කලේ කා වෙතද යන්න පිළිබඳව මා දැනුවත් කරන ලෙසත් , එසේම කොන්ත්‍රාත්කරය ලබාගත් පාර්ශවයද ,ප්‍රධානය කල දින සිට දින 60 ක් තුල ආකෘති පත්‍ර 2 මගින් ලියාපදිංචි විය යුතු බවට වන ව්‍යවස්ථාමය අවශ්‍යතාවය පිළිබඳ දැනුවත් කරන ලෙසත් ඉල්ලා සිටිමි.

P

පොදු කොන්ත්‍රාත් රෙජිස්ට්‍රාර් වෙනුවට